VIRGINIA RAILWAY EXPRESS

NORTHERN VIRGINIA TRANSPORTATION COMMISSION

POTOMAC AND RAPPAHANNOCK TRANSPORTATION COMMISSION

FHWA-534-STP-5A01 (236)

DEVELOPER

VIRGINIA RAILWAY EXPRESS
1500 KING STREET, SUITE 202
ALEXANDRIA, VA 22314
703-684-1001
gotrains@vre.org

NORINE M. WALKER, P.E., PROJECT MANAGER
703-838-5443
nwalker@vre.org

OWNER OF RECORD

CITY OF ALEXANDRIA
ALEXANDRIA CITY HALL
301 KING STREET
ALEXANDRIA, VA 22314
703-746-4500

PROJECT NARRATIVE

THE ALEXANDRIA PEDESTRIAN TUNNEL WILL CREATE A NEW UNDERGROUND PEDESTRIAN WALKWAY LINKING UNION STATION (EAST AND WEST PLATFORM) AND WMATA KING STREET STATION. THE PROJECT WILL REMOVE THE AT GRADE PEDESTRIAN CROSSING OF CSX TRACKS TO ACCESS THE EAST PLATFORM, PROVIDE ADA ACCESSIBILITY INCLUDING ELEVATOR SERVICE FOR ALL RAIL PASSENGERS, AND PROVIDE A DIRECT LINK BETWEEN THE WMATA KING STREET STATION MEZZANINE LEVEL AND UNION STATION. THE PROJECT ALSO INCLUDES AN EXTENSION AND WIDENING OF THE EAST PLATFORM FOR INCREASED PASSENGER SERVICE AND ACCESS TO TRACK 1. THE PROPOSED IMPROVEMENTS WILL ADDRESS CURRENT PUBLIC SAFETY CONCERNS AND GREATLY INCREASE CUSTOMER CONVENIENCE FOR RAIL PASSENGERS UTILIZING RAIL TRANSPORTATION IN THE AREA. THIS SUBMITTAL IS FOR A REQUEST FOR APPROVAL OF THE FINAL DEVELOPMENT SITE PLAN.

ZONING TABULATION

PROPERTY ADDRESS:	110 CALLAHAN DRIVE, ALEXANDRIA, VA 22301
ZONE:	UT (UTILITY AND TRANSPORTATION)
EXISTING USE:	RAIL STATION
PROPOSED USE:	RAIL STATION
TAX PARCEL AREA:	147,962 SQUARE FEET (3.3967 ACRES)
EXISTING IMPERVIOUS AREA:	77701.48 SQUARE FEET (1.78 ACRES)
PROPOSED IMPERVIOUS AREA:	2263.26 SQUARE FEET (0.05 ACRES)
LIMIT OF DISTURBANCE:	6247.55 SQUARE FEET (0.14 ACRES)
GROSS BUILDING AREA (PROPOSED):	0 SQUARE FEET (NO PROPOSED BUILDINGS)

PERMITS / APPROVALS REQUESTED

STORMWATER MANAGEMENT

EXISTING PERMITS / APPROVALS

NONE

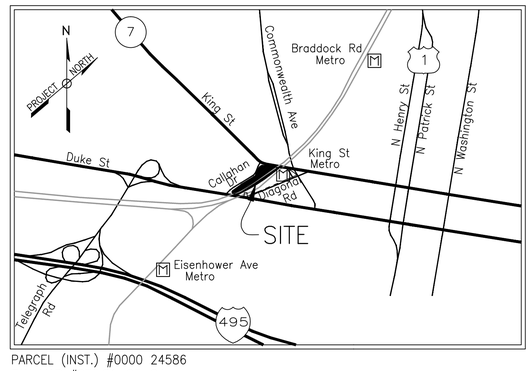

PARCEL (INST.) #0000 24586
TAX MAP #073.01-03-04

VICINITY MAP
NOT TO SCALE

BUILDING CODE ANALYSIS

1. APPLICABLE CODES

BUILDING CODE:	2012 VIRGINIA UNIFORM CONSTRUCTION CODE
PLUMBING CODE:	2012 INTERNATIONAL PLUMBING CODE
ELECTRICAL CODE:	2011 NATIONAL ELECTRICAL CODE (NFPA 70)
MECHANICAL CODE:	2012 INTERNATIONAL MECHANICAL CODE
ENERGY SUBCODE:	2012 INTERNATIONAL ENERGY CONSERVATION CODE
FIRE ALARM CODE:	2013 NFPA 72 NATIONAL FIRE ALARM CODE
FIRE PREVENTION CODE:	2014 NFPA 130 STANDARD FOR FIXED GUIDEWAY TRANSIT AND PASSENGER RAIL SYSTEMS
ACCESSIBILTY CODE:	ACCESSIBILE AND USEABLE BUILDINGS AND FACILITIES – ICC A117.1–2009

2. BUILDING DESCRIPTION (IBC TABLE 503):

CONSTRUCTION TYPE:	2B
USE GROUP:	U (UTILITY)
ALLOWABLE TABULAR AREA:	35,500 SF
ACTUAL AREA:	
EAST PLATFORM AREA:	15,836 SF
CANOPY (INCLUDED IN PLATFORM AREA):	6,900 SF
ALLOWABLE HEIGHT:	5 STORY
ACTUAL HEIGHT: CANOPY	1 STORY

3. PLATFORM OCCUPANCY CALCULATION (NFPA 130):

AREA NAME	OCCUPANT LOAD
EAST PLATFORM	1194

4. OCCUPANCY AND EGRESS:

NUMBER OF OCCUPANTS:	
ENTRAINING LOAD	
TRACK 1:	19
TRACK 2:	95
DETRAINING LOAD:	1080
TOTAL EAST PLATFORM OCCUPANCY:	1194
SAFE DISPERSAL AREA:	398
REQUIRED AREA: 5 SF/PERSON (STANDING)xOCC. =	1,990 SF
NEW STAIR:	424
EXISTING STAIR:	372
TOTAL STAIR LOAD:	796
MINIMUM REQUIRED STAIR WIDTH: (OCC./4 MINUTES/1.41people/inch/minute):	142 INCHES
TOTAL STAIR WIDTH PROVIDED:	150 INCHES
MAXIMUM TRAVEL DISTANCE ON PLATFORM:	325 FT
LONGEST ROUTE ON PLATFORM:	240 FT

5. FIRE SUPPRESION:

ELEVATOR TOWERS– CHEMICAL SYSTEM

PROFESSIONAL CERTIFICATION

I HEREBY CERTIFY THAT THESE DOCUMENTS WERE PREPARED OR APPROVED BY ME, AND THAT I AM A DULY LICENSED PROFESSIONAL ENGINEER UNDER THE LAWS OF THE COMMONWEALTH OF VIRGINIA,
LICENSE NUMBER _____
EXPIRATION DATE: _____

60% SUBMITTAL
MAY, 2016

APPROVED
SPECIAL USE PERMIT NO.
DEPARTMENT OF PLANNING & ZONING
DIRECTOR DATE
DEPARTMENT OF TRANSPORTATION & ENVIRONMENTAL SERVICES
SITE PLAN NO. DSP2011-0027
DIRECTOR DATE
CHAIRMAN, PLANNING COMMISSION DATE
DATE RECORDED
INSTRUMENT NO. DEED BOOK NO. PAGE NO.

DATUM:
(HZ) NAD 83
(VT) NAVD 88

60% SUBMITTAL

CONTRACT NO:		REVISIONS			
PROJECT NO:		BY	NO	DATE	DESCRIPTION
	DATE:	GF	001		DEV. CONCEPT PLAN (30%)
DESIGNED:		GF	002	6/20/16	DEV. SITE PLAN
DRAFTED:					
CHECKED:					
APPROVED:					

Gannett Fleming

COMMONWEALTH OF VIRGINIA
MARTHA JEAN AVERSO
Lic. No. 17470
PROFESSIONAL ENGINEER
6-20-16

VRE

VIRGINIA RAILWAY EXPRESS

ALEXANDRIA
PEDESTRIAN TUNNEL

DISCIPLINE:
GENERAL
DEVELOPMENT SITE PLAN
COVER SHEET

SCALE: NONE
DATE ISSUED: 6/20/16

DRAWING NO: G-002
LIST NO:

C:\pwworking\gfpw01\smellis\d0593522\DSP-58349 G-002.dwg, 6/21/2016 8:13:23 AM, smellis

DRAWING INDEX

GENERAL

G-001	COVER SHEET
G-002	DEVELOPMENT SITE PLAN COVER SHEET
G-003	DRAWING INDEX
G-004	CONSTRUCTION PHASING PHASE 1
G-005	CONSTRUCTION PHASING PHASE 2
G-006	CONSTRUCTION PHASING PHASE 3
G-007	CONSTRUCTION PHASING PHASE 4
G-008	CONSTRUCTION PHASING PHASE 5
G-009	CONSTRUCTION PHASING PHASE 6
G-010	GEOTECHNICAL PLAN VIEW
G-011	GEOTECHNICAL LONG SECTION

CIVIL

C-001	GENERAL NOTES
C-002	LEGEND AND ABBREVIATIONS
C-101	OVERALL SITE PLAN
C-102	EXISTING CONDITIONS PLAN 1
C-103	EXISTING CONDITIONS PLAN 2
C-104	DEMOLITION PLAN 1
C-105	DEMOLITION PLAN 2
C-106	GRADING AND DRAINAGE PLAN 1
C-107	GRADING AND DRAINAGE PLAN 2
C-108	UTILITY PLAN
C-109	STAKEOUT PLAN
C-110	STORMWATER MANAGEMENT PLAN
C-111	WATER QUALITY ASSESSMENT SHEET
C-112	PROPOSED DRAINAGE AREA MAP
C-113	CONSTRUCTION ACCESS PLAN 1
C-114	CONSTRUCTION ACCESS PLAN 2
C-115	MAINTENANCE OF TRAFFIC PLAN
C-116	EASEMENT PLAN 1
C-117	EASEMENT PLAN 2
C-118	EROSION AND SEDIMENT CONTROL PLAN 1
C-119	EROSION AND SEDIMENT CONTROL PLAN 2
C-120	VRRM WORKSHEETS AND STORM SEWER COMPUTATION
C-121	VRRM WORKSHEETS AND STORM SEWER COMPUTATIONS
C-201	STORM DRAIN PROFILE
C-501	STORM DRAIN DETAILS
C-502	DETAILS
C-503	STORMWATER MANAGEMENT DETAILS
C-504	EROSION AND SEDIMENT CONTROL NOTES AND NARRATIVE
C-505	EROSION AND SEDIMENT CONTROL MINIMUM STANDARDS
C-506	EROSION AND SEDIMENT CONTROL DETAILS
C-507	EROSION AND SEDIMENT CONTROL DETAILS

STRUCTURAL

S-001	GENERAL NOTES AND ABBREVIATIONS 1 OF 4
S-002	GENERAL NOTES AND ABBREVIATIONS 2 OF 4
S-003	GENERAL NOTES AND ABBREVIATIONS 3 OF 4
S-004	GENERAL NOTES AND ABBREVIATIONS 4 OF 4
S-100	OVERALL DEMOLITION PLAN
S-101	DEMOLITION PART PLAN 1 OF 2
S-102	DEMOLITION PART PLAN 2 OF 2
S-103	CANOPY DEMOLITION PLAN
S-104	OVERALL TUNNEL PLAN
S-105	TUNNEL PART PLAN 1 OF 2
S-106	TUNNEL PART PLAN 2 OF 2
S-107	OVERALL TUNNEL ROOF PLAN
S-108	TUNNEL ROOF PART PLAN 1 OF 2
S-109	TUNNEL ROOF PART PLAN 2 OF 2
S-110	OVERALL PLATFORM PLAN
S-111	PLATFORM PART PLAN 1 OF 3
S-112	PLATFORM PART PLAN 2 OF 3
S-113	PLATFORM PART PLAN 3 OF 3
S-114	OVERALL CANOPY PLAN
S-115	CANOPY PART PLAN 1 OF 2
S-116	CANOPY PART PLAN 2 OF 2
S-117	SUPPORT OF EXCAVATION PLAN
S-118	TRACK BASELINE ALIGNMENT HORIZONTAL AND VERTICAL
S-300	TUNNEL LONGITUDINAL SECTION
S-301	TUNNEL SECTIONS AND DETAILS
S-302	SECTIONS
S-303	CANOPY SECTION 1 OF 3
S-304	CANOPY SECTION 2 OF 3
S-305	CANOPY SECTION 3 OF 3
S-306	SUPPORT OF EXCAVATION SECTIONS
S-307	CUT AND COVER TUNNEL SECTIONS
S-308	EAST PLATFORM ELEVATOR SECTION
S-400	WEST CUT AND COVER FOUNDATION PLAN
S-401	EAST PLATFORM STAIR FOUNDATION PLAN AND DETAILS
S-402	ELEVATOR ROOF PLAN AND DETAILS
S-500	DEMOLITION SECTIONS AND DETAILS
S-501	SECTIONS AND DETAILS
S-502	SECTIONS AND DETAILS
S-503	SECTIONS AND DETAILS
S-504	SUPPORT OF EXCAVATION DETAILS
S-786	CUT AND COVER TUNNEL WATERPROOFING DETAILS

STRUCTURAL - TUNNEL

S-050	SEM TUNNEL GENERAL NOTES
S-150	SEM TUNNEL PLAN GENERAL ARRANGEMENT
S-350	GENERAL ARRANGEMENT LONGITUDINAL SECTION
S-351	GENERAL ARRANGEMENT TYPICAL CROSS SECTION
S-352	TYPICAL GEOMETRY CROSS SECTIONS
S-750	PRE-SUPPORT SETTING OUT ARRANGEMENT EAST SHAFT
S-751	PRE-SUPPORT SETTING OUT ARRANGEMENT WEST SHAFT
S-752	EXCAVATION & SUPPORT SEQUENCE EAST SEM TUNNEL
S-753	EXCAVATION & SUPPORT SEQUENCE WEST SEM TUNNEL
S-754	EXCAVATION AND SUPPORT LINING THICKNESS SCHEDULE
S-759	EXCAVATION AND SUPPORT INITIAL LINING DETAILS
S-760	INSTRUMENTATION & MONITORING KEY PLAN
S-761	INSTRUMENTATION & MONITORING UNION STATION ENTRANCE PLAN
S-762	INSTRUMENTATION & MONITORING TUNNEL & EAST PLATFORM PLAN
S-763	INSTRUMENTATION & MONITORING KING STREET STATION ENTRANCE PLAN
S-764	INSTRUMENTATION & MONITORING CSX TRACKS
S-765	INSTRUMENTATION & MONITORING CROSS SECTION AND DETAILS
S-780	WATERPROOFING KEY PLAN
S-781	WATERPROOFING EAST LONGITUDINAL SECTION
S-782	WATERPROOFING WEST LONGITUDINAL SECTION
S-783	WATERPROOFING CROSS SECTION & TYPICAL DETAILS
S-790	CONSTRUCTION SEQUENCING SHEET 1 OF 3
S-791	CONSTRUCTION SEQUENCING SHEET 2 OF 3
S-792	CONSTRUCTION SEQUENCING SHEET 3 OF 3

ARCHITECTURAL

A-001	GENERAL NOTES, LEGENDS AND ABBREVIATIONS
A-002	CODE INFORMATION AND LIFE SAFETY PLAN
A-100	KEY PLAN
A-101	DEMOLITION PLAN
A-102	ELEVATORS AND TUNNEL PLANS
A-103	CANOPY ROOF PLAN
A-104	ENLARGED PLANS
A-200	CANOPY ELEVATIONS
A-201	EAST CANOPY ELEVATION
A-202	EAST CANOPY ELEVATION
A-203	ELEVATION / SECTIONS
A-204	SECURITY GATE PLAN, ELEVATIONS AND DETAILS
A-205	CANOPY AND TUNNEL DETAILS
A-300	ELEVATOR 1 SECTION
A-301	WALL DETAILS
A-400	SIGNAGE PLAN & SCHEDULE
A-401	PLATFORM SIGNAGE/CANOPY PLAN
A-402	PLATFORM SIGNAGE/CANOPY PLAN
A-500	SIGNAGE GRAPHICS & DETAILS
A-501	SIGNAGE GRAPHICS & DETAILS
A-600	SCHEDULES & DETAILS

VERTICAL TRANSPORTATION

VT-001	ELEVATOR ABBREVIATIONS AND GENERAL NOTES
VT-002	ELEVATOR TECHNICAL DATA
VT-101	ELEVATOR 1 PLANS
VT-102	ELEVATOR 2 PLANS
VT-103	TUNNEL LEVEL ELEVATOR CONTROLLER ROOM PLAN
VT-301	ELEVATOR 1 SECTION
VT-302	ELEVATOR 2 SECTION

MECHANICAL

M-001	LEGEND, GENERAL NOTES AND ABBREVIATIONS
M-101	OVERALL PLATFORM PLAN
M-102	TUNNEL PART PLAN
M-103	TUNNEL PART PLAN

ELECTRICAL

E-001	LEGEND, GENERAL NOTES AND ABBREVIATIONS
E-100	SITE PLAN – DEMOLITION
E-101	DEMOLITION PLAN – TUNNEL
E-102	OVERALL SITE PLAN
E-103	SITE PARTIAL PLAN A
E-104	SITE PARTIAL PLAN B
E-105	SITE PARTIAL PLAN C
E-106	POWER PLAN – TUNNEL
E-107	LIGHTING PLAN – TUNNEL
E-108	SITE PLAN – SPECIAL SYSTEMS
E-401	ENLARGED ELECTRICAL PLANS
E-501	ELEVATIONS AND DETAILS
E-601	ONE-LINE DIAGRAMS AND RISER
E-602	SCHEDULES

APPROVED
SPECIAL USE PERMIT NO.
DEPARTMENT OF PLANNING & ZONING

DIRECTOR DATE

DEPARTMENT OF TRANSPORTATION & ENVIRONMENTAL SERVICES
SITE PLAN NO. DSP2011-0027

DIRECTOR DATE

CHAIRMAN, PLANNING COMMISSION DATE

DATE RECORDED

INSTRUMENT NO. DEED BOOK NO. PAGE NO.

60% SUBMITTAL

CONTRACT NO:
PROJECT NO:

	DATE:
DESIGNED: IA	
DRAFTED: LTN	
CHECKED: MA/DB	
APPROVED:	

REVISIONS

BY	NO	DATE	DESCRIPTION
GF	001		DEV. CONCEPT PLAN (30%)
GF	002	6/20/16	DEV. SITE PLAN

Gannett Fleming

COMMONWEALTH OF VIRGINIA
MARTHA JEAN AVERSO
Lic. No. 17470
PROFESSIONAL ENGINEER
6-20-16

VRE

VIRGINIA RAILWAY EXPRESS

ALEXANDRIA
PEDESTRIAN TUNNEL

DISCIPLINE:
GENERAL
DRAWING INDEX

DRAWING NO: G-003

LIST NO:

SCALE: NONE

DATE ISSUED: 6/20/16

C:\pwworking\gfpw01\smello\d0593522\DSP-58349 G-003.dwg, 6/21/2016 8:15:03 AM, smello

GENERAL NOTES

1.) THE PROPERTIES SHOWN ARE IDENTIFIED AS THE CITY OF ALEXANDRIA, VIRGINIA TAX MAP NUMBERS 073.01-03-03 AND 073.01-03-04 AND ARE ZONED UT.

2.) THE PROPERTIES SHOWN HEREON ARE IN THE NAME OF CSX TRANSPORTATION, INC. (073.01-03-03) BY INSTRUMENT NUMBER 060019038, AND THE CITY OF ALEXANDRIA (073.01-03-04) BY INSTRUMENT NUMBER 000024586, ALL AMONG THE LAND RECORDS OF THE CITY OF ALEXANDRIA, VIRGINIA.

3.) THE PHYSICAL IMPROVEMENTS SHOWN HEREON ARE BASED UPON A FIELD SURVEY DONE BY THIS FIRM BETWEEN THE DATES OF JANUARY 2, 2015 AND APRIL 11, 2015.

4.) THE BOUNDARY SHOWN HEREON IS BASED UPON A FIELD SURVEY DONE BY THIS FIRM BETWEEN THE DATES OF FEBRUARY 23 AND 24, 2000 AND AVAILABLE DEEDS AND PLATS OF RECORD.

5.) NO TITLE REPORT FURNISHED. ALL UNDERLYING TITLE LINES, EASEMENTS, SERVITUDES AND OTHER MATTERS OF TITLE MAY NOT BE SHOWN HEREON.

6.) A.) HORIZONTAL DATUM SHOWN HEREON IS REFERENCED TO THE VIRGINIA STATE GRID NORTH (NAD83) AS ESTABLISHED BY A CURRENT GPS FIELD SURVEY.

B.) THE VERTICAL DATUM SHOWN HEREON IS REFERENCED TO THE NORTH AMERICAN VERTICAL DATUM OF 1988 (NAVD 88) AS ESTABLISHED BY A CURRENT GPS FIELD SURVEY.

7.) NO GEOTECHNICAL, SUBSURFACE, FIELD REVIEWS, RESEARCH, AGENCY OR GOVERNMENTAL RECORD REVIEWS, OR OTHER INVESTIGATIONS HAVE BEEN MADE FOR THE PURPOSE OF LOCATING, OR DETERMINING THE EXISTENCE OF WETLANDS, HAZARDOUS MATERIALS, OR OTHER ENVIRONMENTAL CONCERNS ON SITE IN THE PERFORMANCE OF CHRISTOPHER CONSULTANTS, LTD SERVICES FOR THE PROJECT AS SHOWN HEREON.

FLOOD ZONE NOTE

THE PROPERTIES SHOWN HEREON ARE LOCATED ON THE FLOOD INSURANCE RATE MAP (FIRM), COMMUNITY PANEL NO. 515519 0037E AND 515519 0041E, REVISED ON JUNE 16, 2001.

BY GRAPHIC DEPICTION ONLY, THE PROPERTY SHOWN HEREON IS SHOWN IN:
- FLOOD ZONE "X", AREAS DETERMINED TO BE OUTSIDE THE 0.2% ANNUAL CHANCE FLOODPLAIN.

A FIELD SURVEY WAS NOT PERFORMED TO DETERMINE THE FLOOD ZONES LISTED HEREON. AN ELEVATION CERTIFICATE MAY BE NEEDED TO VERIFY THIS DETERMINATION OR APPLY FOR A VARIANCE FROM THE FEDERAL EMERGENCY MANAGEMENT AGENCY.

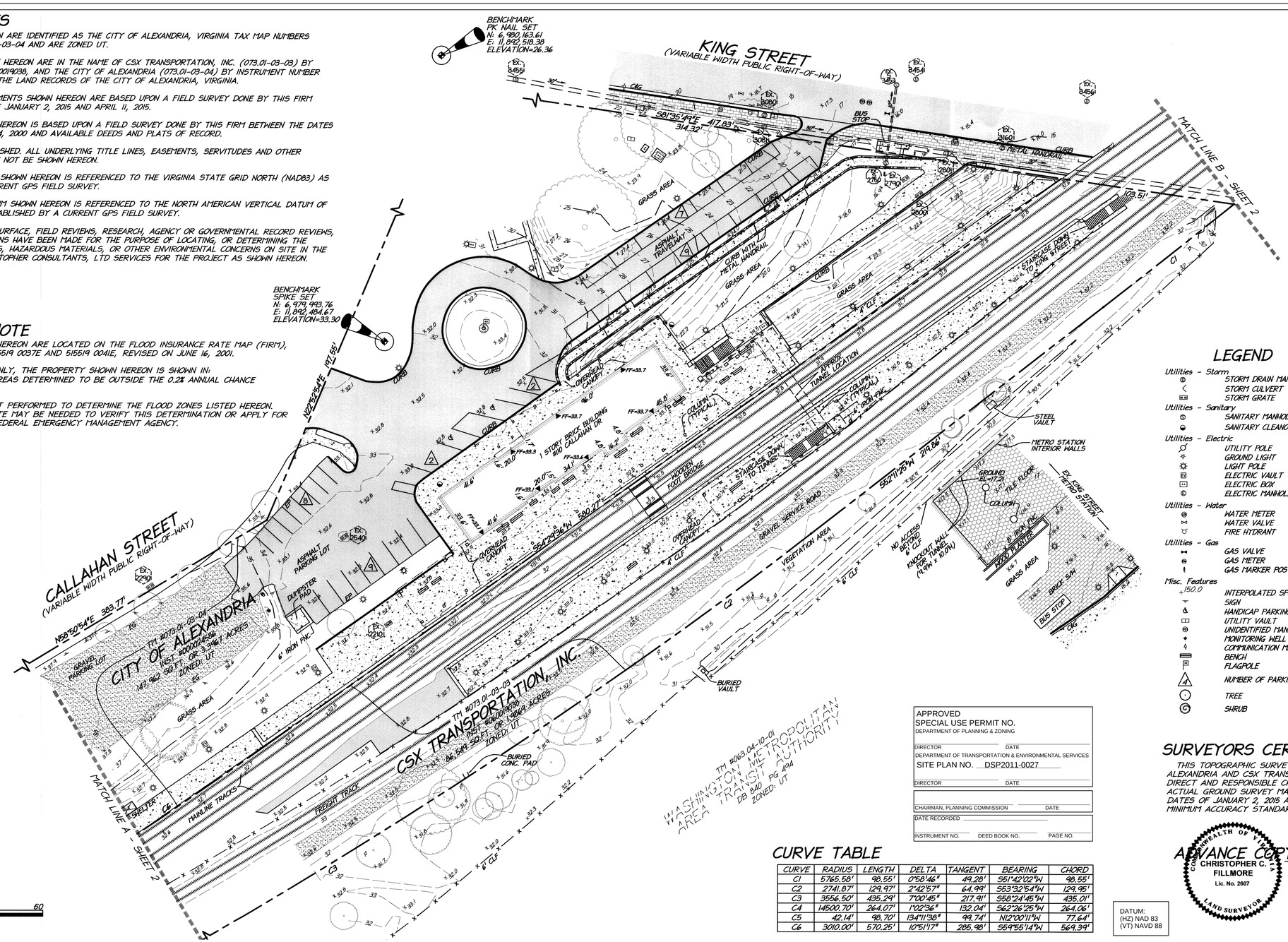

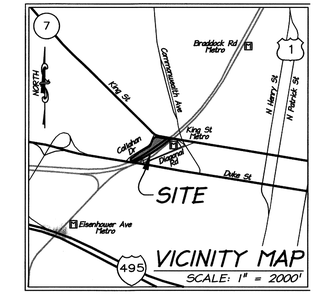

LEGEND

Utilities - Storm
- STORM DRAIN MANHOLE
- STORM CULVERT
- STORM GRATE

Utilities - Sanitary
- SANITARY MANHOLE
- SANITARY CLEANOUT

Utilities - Electric
- UTILITY POLE
- GROUND LIGHT
- LIGHT POLE
- ELECTRIC VAULT
- ELECTRIC BOX
- ELECTRIC MANHOLE

Utilities - Water
- WATER METER
- WATER VALVE
- FIRE HYDRANT

Utilities - Gas
- GAS VALVE
- GAS METER
- GAS MARKER POST

Misc. Features
- 150.0 INTERPOLATED SPOT SHOT
- SIGN
- HANDICAP PARKING SPACE
- UTILITY VAULT
- UNIDENTIFIED MANHOLE
- MONITORING WELL
- COMMUNICATION MARKER POST
- BENCH
- FLAGPOLE
- NUMBER OF PARKING SPACES
- TREE
- SHRUB

Surfaces
- ASPHALT AREA
- CONCRETE AREA
- GRAVEL AREA

Linetypes
- INDEX CONTOUR (5')
- INT. CONTOUR (1')
- FENCE
- OVERHEAD UTILITY LINE
- RAIL LINE

Abbreviations

EP	EDGE OF PAVEMENT
EG	EDGE OF GRAVEL
C&G	CURB & GUTTER
FNC	FENCE
CLF	CHAIN LINK FENCE

APPROVED
SPECIAL USE PERMIT NO.
DEPARTMENT OF PLANNING & ZONING

DIRECTOR _____ DATE _____

DEPARTMENT OF TRANSPORTATION & ENVIRONMENTAL SERVICES
SITE PLAN NO. DSP2011-0027

DIRECTOR _____ DATE _____

CHAIRMAN, PLANNING COMMISSION _____ DATE _____

DATE RECORDED _____

INSTRUMENT NO. _____ DEED BOOK NO. _____ PAGE NO. _____

CURVE TABLE

CURVE	RADIUS	LENGTH	DELTA	TANGENT	BEARING	CHORD
C1	5765.58'	98.55'	0°58'46"	49.28'	S51°42'02"W	98.55'
C2	2741.87'	129.97'	2°42'57"	64.99'	S53°32'54"W	129.95'
C3	3556.50'	435.29'	7°00'45"	217.91'	S58°24'45"W	435.01'
C4	14500.70'	264.07'	1°02'36"	132.04'	S62°26'25"W	264.06'
C5	42.14'	98.70'	134°11'38"	99.74'	N12°00'11"W	77.64'
C6	3010.00'	570.25'	10°51'17"	285.98'	S59°55'14"W	569.39'

DATUM:
(HZ) NAD 83
(VT) NAVD 88

SURVEYORS CERTIFICATION

THIS TOPOGRAPHIC SURVEY ON A PORTION OF LANDS OF THE CITY OF ALEXANDRIA AND CSX TRANSPORTATION, INC. WAS COMPLETED UNDER THE DIRECT AND RESPONSIBLE CHARGE OF CHRISTOPHER C. FILLMORE FROM AN ACTUAL GROUND SURVEY MADE UNDER MY SUPERVISION; BETWEEN THE DATES OF JANUARY 2, 2015 AND APRIL 11, 2015 AND THAT THIS PLAT MEETS MINIMUM ACCURACY STANDARDS UNLESS OTHERWISE NOTED.

COMMONWEALTH OF VIRGINIA
CHRISTOPHER C. FILLMORE
Lic. No. 2607
LAND SURVEYOR

ADVANCE COPY

CHRISTOPHER C. FILLMORE, LS
COMMONWEALTH OF VIRGINIA
LICENSED LAND SURVEYOR NO. : 2607

60% SUBMITTAL

CONTRACT NO:		REVISIONS			
PROJECT NO:		BY	NO	DATE	DESCRIPTION
	DATE:	GF	001		DEV. CONCEPT PLAN (30%)
DESIGNED:		GF	002	6/20/16	DEV. SITE PLAN
DRAFTED:					
CHECKED:					
APPROVED:					

Gannett Fleming

COMMONWEALTH OF VIRGINIA
MARTHA JEAN AVERSO
Lic. No. 17470
PROFESSIONAL ENGINEER
6-20-16

VRE

VIRGINIA RAILWAY EXPRESS

ALEXANDRIA
PEDESTRIAN TUNNEL

DISCIPLINE: CIVIL
SURVEY PLAN 1

DRAWING NO: G-004

LIST NO:

SCALE: NONE

DATE ISSUED: 6/20/16

C:\pwworking\gfpv01\smello\d0593522\DSP-58349 G-004SUR.dwg, 6/21/2016 8:18:06 AM, smello

STORM AND SANITARY ASBUILTS

EX. 2290 — STM 2290
TOP=34.88

EX. 2122 — STM 2122
TOP=32.79
FULL OF VEGETATION

EX. 2210 — STM 2210
TOP=32.50

EX. 2540 — STM 2540
TOP=31.71

EX. 2800 — STM 2800
TOP=16.44
FULL OF SILT

EX. 2790 — STM 2790
TOP=16.04
FULL OF SILT

EX. 3455 — STM 3455
TOP=23.47
INV OUT=16.62(30" TO 3081)

EX. 3081 — STM 3081
TOP=18.74

EX. 2801 — STM 2801
TOP=16.06
INV IN=9.51(30" FR 3081)
INV OUT=9.41(30" TO 3452)

EX. 3452 — STM 3452
TOP=14.16
INV IN=7.96(30" FR 2801)
INV OUT=7.76(30" TO E)

EX. 3080 — STM 3080
TOP=18.56

EX. 3454 — STM 3454
TOP=15.70
NOT ACCESSIBLE AT TIME OF SURVEY

EX. 3160 — STM 3160
TOP=15.52

EX. 3456 — STM 3456
TOP=15.06
NOT ACCESSIBLE AT TIME OF SURVEY

EX. 2750 — SAN 2750
TOP=16.99
INV IN=10.07(6" FR SW)
INV OUT=9.94(10" TO 3453)

EX. 3453 — SAN 3453
TOP=16.08
NOT ACCESSIBLE AT TIME OF SURVEY

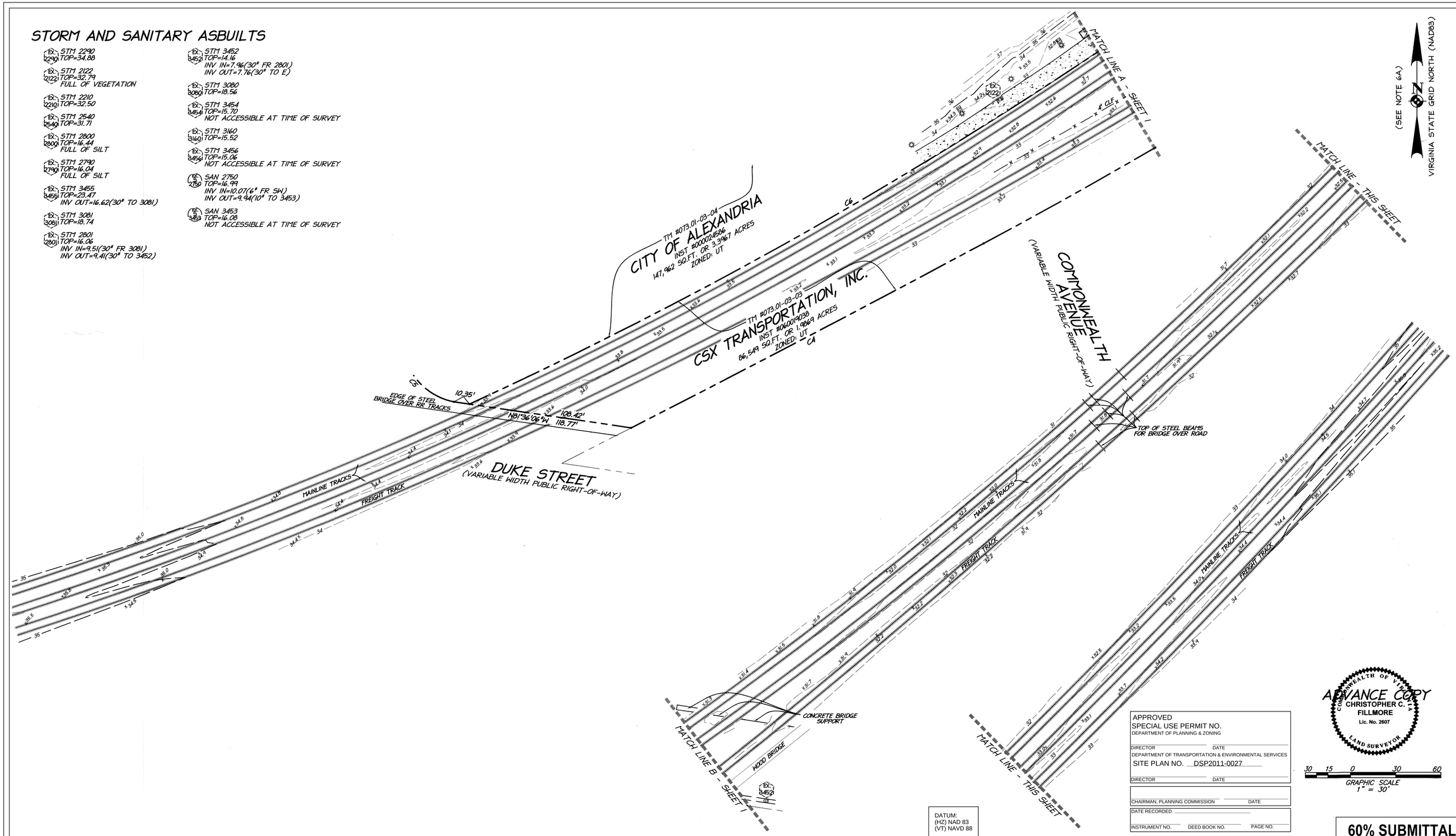

DATUM:
(HZ) NAD 83
(VT) NAVD 88

APPROVED
SPECIAL USE PERMIT NO.
DEPARTMENT OF PLANNING & ZONING
DIRECTOR DATE
DEPARTMENT OF TRANSPORTATION & ENVIRONMENTAL SERVICES
SITE PLAN NO. DSP2011-0027
DIRECTOR DATE
CHAIRMAN, PLANNING COMMISSION DATE
DATE RECORDED
INSTRUMENT NO. DEED BOOK NO. PAGE NO.

COMMONWEALTH OF VIRGINIA
ADVANCE COPY
CHRISTOPHER C. FILLMORE
Lic. No. 2607
LAND SURVEYOR

30 15 0 30 60
GRAPHIC SCALE
1" = 30'

60% SUBMITTAL

CONTRACT NO:		REVISIONS			
PROJECT NO:		BY	NO	DATE	DESCRIPTION
	DATE:	GF	001		DEV. CONCEPT PLAN (30%)
DESIGNED:		GF	002	6/20/16	DEV. SITE PLAN
DRAFTED:					
CHECKED:					
APPROVED:					

Gannett Fleming

COMMONWEALTH OF VIRGINIA
MARTHA JEAN AVERSO
Lic. No. 17470
PROFESSIONAL ENGINEER
6-20-16

VRE

VIRGINIA RAILWAY EXPRESS

ALEXANDRIA
PEDESTRIAN TUNNEL

DISCIPLINE:
CIVIL
SURVEY PLAN 2

DRAWING NO:
G-005

LIST NO:

SCALE: NONE

DATE ISSUED: 6/20/16

C:\pwworking\gfpw01\smelio\d0593522\DSP-58349 G-005SUR.dwg, 6/21/2016 8:19:17 AM, smelio

CITY STANDARD GENERAL NOTES

1. THE SUBJECT SITE IS LOCATED ON CITY OF ALEXANDRIA, VIRGINIA TAX MAP NUMBERS 073.01-03-03 AND 073.01-03-04 AND IS ZONED UT.

2. OWNER: CITY OF ALEXANDRIA.

3. DEED BOOK ___ PAGE ___, DEED BOOK ___ PAGE ___

4. 110 CALLAHAN DRIVE, ALEXANDRIA, VA

5. AREA TABULATION (TOTAL SITE AREA 3.40 AC (147,962 SF), CONSTRUCTION AREA 0.14 AC (6248 SF), DISTURBED AREA 0.14 AC (6248 SF), EXISTING IMPERVIOUS 1.78 AC (77701 SF), PROPOSED IMPERVIOUS 0.05 AC (2263 SF)

6. THE NATURAL SOILS AT THE SITE CONSIST OF URBAN LAND AND URBAN LAND-GRIST MILL. SOIL INFORMATION OBTAINED FROM NATURAL RESOURCES CONSERVATION SERVICE, WEB SOIL SURVEY NATIONAL COOPERATIVE SOIL SURVEY.

7. THE SITE IS LOCATED IN THE TIMBER BRANCH WATERSHED.

8. CONSTRUCTION PERMITS ARE REQUIRED FOR THIS PROJECT. THE APPROVED SITE PLAN MUST BE ATTACHED TO THE PERMIT APPLICATION THAT FULLY DETAILS THE CONSTRUCTION AS WELL AS LAYOUTS AND SCHEMATICS OF THE MECHANICAL, ELECTRICAL, AND PLUMBING SYSTEMS.

9. ALL PUBLIC AND PRIVATE EASEMENTS OR ALL KNOWN PUBLIC AND PRIVATE EASEMENTS, INCLUDING ALL UTILITY, EGRESS, AND CONSERVATION RESTRICTIONS ARE SHOWN. THE APPLICANT SHALL NOT CONSTRUCT ANY PERMANENT STRUCTURES OVER ANY EXISTING OR PROPOSED PUBLIC AND/OR PRIVATE EASEMENTS UNLESS OTHERWISE APPROVED BY THE PLANNING COMMISSION AND CITY OF ALEXANDRIA COUNCIL.

10. PLAT SUBJECT TO RESTRICTIONS OF RECORD.

11. BUILDING HEIGHT SHALL NOT EXCEED THE ALLOWABLE LIMIT BY CITY OF ALEXANDRIA ZONING ORDINANCE OR AS APPROVED BY THE PLANNING COMMISSION AND CITY OF ALEXANDRIA COUNCIL.

12. ALL NEW CONSTRUCTION SHALL CONFORM TO THE CURRENT STANDARDS AND SPECIFICATIONS OF THE CITY OF ALEXANDRIA AND TO THE VIRGINIA UNIFORM STATEWIDE BUILDING CODE (USBC).

13. FLOOR AREA CALCULATIONS WITH ALLOWABLE LIMITS, AS APPROVED BY PLANNING COMMISSION AND CITY COUNCIL, ARE DEMONSTRATED HEREIN.

14. PRIOR TO COMMENCING NEW WORK, THE CONTRACTOR SHALL PROTECT FROM DAMAGE ALL EXISTING ADJACENT AREAS. IF CITY'S EXISTING PUBLIC INFRASTRUCTURE, INCLUDING BUT NOT LIMITED, TO STREETS, ALLEYWAYS, DRIVEWAY APRONS, SANITARY AND STORM SEWERS, STREET LIGHTING, TRAFFIC AND PEDESTRIAN SIGNALS, SIDEWALKS, CURB AND GUTTER, AND STORM WATER DROP INLET STRUCTURES ARE DAMAGED BY THE CONTRACTOR OR BY ACTIVITIES RELATING TO THE SITE CONSTRUCTION THEN THE APPLICANT SHALL REPAIR THE SAME TO THE SATISFACTION OF DIRECTOR, TRANSPORTATION AND ENVIRONMENTAL SERVICES (T&ES). A PRE-CONSTRUCTION WALK/SURVEY OF THE SITE SHALL OCCUR WITH CONSTRUCTION AND INSPECTION STAFF TO DOCUMENT EXISTING CONDITIONS PRIOR TO ANY LAND DISTURBING ACTIVITY.

15. ALL IMPROVEMENTS TO THE CITY'S RIGHT-OF-WAY SUCH AS CURB, GUTTER, SIDEWALK, AND DRIVEWAY APRONS, ETC., ARE DESIGNED PER THE CITY OF ALEXANDRIA STANDARDS AND SPECIFICATIONS.

16. ALL STREET CUT AND PATCH WORK LOCATED IN PUBLIC RIGHT-OF-WAYS, REQUIRED FOR ANY UTILITY INSTALLATION SHALL BE PERFORMED IN STRICT ACCORDANCE WITH THE CITY OF ALEXANDRIA STANDARDS AND SPECIFICATIONS AND TO THE SATISFACTION OF THE DIRECTOR OF TRANSPORTATION AND ENVIRONMENTAL SERVICES (T&ES).

17. CONTRACTOR MUST ENSURE THAT THERE IS NO DISTURBANCE ON ADJACENT PROPERTIES WITHOUT RECORDED EASEMENT OR NOTARIZED LETTER OF PERMISSION FROM THE ADJACENT PROPERTY OWNERS.

18. ALL REQUIRED STATE AND FEDERAL PERMITS, WHICH COULD INCLUDE PERMITS FROM THE VIRGINIA DEPARTMENT OF CONSERVATION AND RECREATION (VDCR), VIRGINIA DEPARTMENT OF ENVIRONMENTAL QUALITY (VDEQ), VIRGINIA DEPARTMENT OF HISTORIC RESOURCES (VDHR), UNITED STATES ENVIRONMENTAL PROTECTION AGENCY (USEPA), ARMY CORPS OF ENGINEERS AND VIRGINIA MARINE RESOURCES, MUST BE IN PLACE FOR ALL PROJECT CONSTRUCTION AND MITIGATION WORK PRIOR TO RELEASE OF THE FINAL SITE PLAN. THIS INCLUDES THE STATE REQUIREMENT FOR A VIRGINIA STORMWATER MANAGEMENT PROGRAM (VSMP) GENERAL PERMIT FOR DISCHARGES OF STORMWATER FROM CONSTRUCTION ACTIVITIES FOR LAND DISTURBING ACTIVITIES GREATER THAN 2,500. INFORMATION REGARDING THE VSMP GENERAL PERMIT CAN BE FOUND ONLINE AT: http://www.dcr.virginia.gov/soil and water/vsmp.shtml.

19. PERMITS FROM THE CITY OF ALEXANDRIA OFFICE OF ENVIRONMENTAL QUALITY (OEQ), TRANSPORTATION AND ENVIRONMENTAL SERVICES (T&ES), AND BUILDING AND FIRE CODE ADMINISTRATION SHALL BE OBTAINED BY THE APPLICANT, AS REQUIRED AND DOCUMENTED HEREIN. THE CONTRACTOR CAN CONTACT ALEXANDRIA FIRE AND CODE ADMINISTRATION DEPARTMENT AT (703) 838-4644 OR (703) 746-4200 WITH ANY QUESTIONS OR ADDITIONAL INFORMATION.

20. ANY WORK IN THE PUBLIC RIGHT OF WAY SHALL REQUIRE A SEPARATE PERMIT FROM THE DIRECTOR, TRANSPORTATION AND ENVIRONMENTAL SERVICES. THE CONTRACTOR CAN CONTACT THE DEPARTMENT OF TRANSPORTATION AND ENVIRONMENTAL SERVICES AT (703) 746-4035 WITH ANY QUESTIONS OR ADDITIONAL INFORMATION.

21. THE PROPERTY ADDRESS MUST BE CLEARLY MARKED IN THE FRONT AND BACK OF THE PROPOSED DEVELOPMENT SITE DURING CONSTRUCTION FOR EMERGENCY RESPONSE PURPOSES IN CONTRASTING COLORS FOR EASY IDENTIFICATION.

22. THE APPLICANT SHALL CONTACT THE CRIME PREVENTION UNIT OF THE ALEXANDRIA POLICE DEPARTMENT AT 703-838-4520 REGARDING SECURITY HARDWARE FOR NEW CONSTRUCTION. THIS SHALL BE COMPLETED PRIOR TO ISSUANCE OF A BUILDING PERMIT.

23. THE CONTRACTOR MUST ENSURE THAT POSITIVE DRAINAGE OCCURS ON SITE TO PREVENT PONDING OR DRAINAGE PROBLEMS ON ADJACENT PROPERTIES.

24. A SEPARATE DESIGN IS REQUIRED FOR ALL WALLS 24" AND OVER IN HEIGHT FROM THE GRADE AND SUBJECT TO SEPARATE PERMITS TO BE OBTAINED BY THE OWNERS. GEOTECHNICAL AND STRUCTURAL DESIGN IS TO BE COMPLETED BY OTHERS. THIS FINAL SITE PLAN SHOWS LOCATION, PROPOSED GRADING, AND DESIGN OF ALL THE WALLS.

25. SUBMIT A SURVEY, CONSISTENT WITH THE REQUIREMENTS FOR CERTIFICATE OF OCCUPANCYCHECKLIST, TO THE DEPARTMENT OF TRANSPORTATION AND ENVIRONMENTAL SERVICES PRIOR TO REQUESTING AN INSPECTION FOR A CERTIFICATE OF OCCUPANCY.

26. ALL SANITARY SEWER LATERALS AND/OR SEWERS NOT SHOWN IN THE EASEMENTS SHALL BE OWNED AND MAINTAINED PRIVATELY.

27. ALL STORM DRAINS NOT SHOWN WITHIN AN EASEMENT OR IN A PUBLIC RIGHT OF WAY SHALL BE OWNED AND MAINTAINED PRIVATELY.

CITY STANDARD GENERAL NOTES CONTINUED:

28. ALL WATER FACILITY CONSTRUCTION SHALL CONFORM TO VIRGINIA AMERICAN (VAW) STANDARDS AND SPECIFICATIONS. NO WORK CAN BE COMPLETED ON EXISTING AND PROPOSED WATER FACILITIES UNTIL ALL EASEMENTS AND AGREEMENTS WITH VAW ARE FINALIZED, EXECUTED AND RECORDED. DEVELOPER OR CONTRACTOR SHALL CONTACT VAW AT 703--706--3889 TO OBTAIN AN APPROVED PROPOSEAL AND PAY ALL REQUIRED FEES, PRIOR TO THE START OF CONSTRUCTION, DEMOLITION AND INSPECTION OF WATER FACILITIES, INCLUDING, BUT NOT LIMITED TO, WATER MAIN, FIRE HYDRANTS, DOMESTIC AND FIRE SERVICE LINES. ALL PROPOSED WET TAPS ON AN EXISTING WATERMAIN SHALL BE CONSTRUCTED BY VAW.

29. THE SIDEWALKS SHALL REMAIN OPENED DURING CONSTRUCTION OR PEDESTRIAN ACCESS SHALL BE MAINTAINED TO THE SATISFACTION OF THE DIRECTOR OF TRANSPORTATION AND ENVIRONMENTAL SERVICES THROUGHOUT THE CONSTRUCTION OF THE PROJECT.

30. PRIOR TO THE RELEASE OF THE FINAL SITE PLAN, A TRAFFIC CONTROL PLAN FOR CONSTRUCTION DETAILING PROPOSED CONTROLS TO TRAFFIC MOVEMENT, LANE CLOSURES, CONSTRUCTION ENTRANCES, HAUL ROUTES, AND STORAGE AND STAGING SHALL BE PROVIDED FOR INFORMATION PURPOSE; HOWEVER, AN AMENDED TRAFFIC CONTROL PLAN, IF REQUIRED BY THE DIRECTOR OF TRANSPORTATION AND ENVIRONMENTAL SERVICES SHALL BE SUBMITIED TO THE DIRECTOR OF TRANSPORTATION AND ENVIRONMENTAL SERVICES ALONG WITH THE BUILDING PERMIT APPLICATION. THE FINAL SITE PLAN SHALL INCLUDE A STATEMENT "FOR INFORMATION ONLY" ON THE TRAFFIC CONTROL PLAN SHEETS.

EMERGENCY VEHICLE EASEMENTS NOTE

1. ALL EMERGENCY VEHICLE EASEMENTS ARE SHOWN ON THE PLAN AND SHALL BE RECORDED WITH ALEXANDRIA LAND RECORDS.

FLOOD PLAIN NOTES

1. THE SITE LIES OUTSIDE 100-YEAR FLOOD PLAIN WATER SURFACE ELEVATION (WSE) PER THE DEMARCATION OF THE CURRENT FLOOD INSURANCE RATE MAP (FIRM) PUBLISHED BY FEDERAL EMERGENCY MANAGEMENT AGENCY (FEMA).

2. THE PLAN DEMONSTRATES COMPLIANCE WITH THE CONDITIONS OF THE SITE PLAN APPROVAL.

ARCHAEOLOGY NOTES

1. THE APPLICANT/DEVELOPER SHALL CALL ALEXANDRIA ARCHAEOLOGY IMMEDIATELY (703-746-4399) IF ANY BURIED STRUCTURAL REMAINS (WALL FOUNDATIONS, WELLS, PRIVIES, CISTERNS, ETC.) OR CONCENTRATIONS OF ARTIFACTS ARE DISCOVERED DURING DEVELOPMENT. WORK MUST CEASE IN THE AREA OF THE DISCOVERY UNTIL A CITY ARCHAEOLOGIST COMES TO THE SITE AND RECORDS THE FINDS.

2. THE APPLICANT/DEVELOPER SHALL NOT ALLOW ANY METAL DETECTION AND/OR ARTIFACT COLLECTION TO BE CONDUCTED ON THE PROPERTY, UNLESS AUTHORIZED BY ALEXANDRIA ARCHAEOLOGY. FAILURE TO COMPLY SHALL RESULT IN PROJECT DELAYS.

3. ALL REQUIRED ARCHAEOLOGICAL PRESERVATION MEASURES SHALL BE COMPLETED IN COMPLIANCE WITH SECTION 11-411 OF THE ZONING ORDINANCE.

4. AS THIS PROJECT IS A FEDERAL UNDERTAKING, THE APPLICANT SHALL COMPLY WITH FEDERAL PRESERVATION LAWS, IN PARTICULAR SECTION 106 OF THE NATIONAL HISTORIC PRESERVATION ACT OF 1966. THE APPLICANT WILL COORDINATE WITH THE VIRGINIA DEPARTMENT OF HISTORIC RESOURCES AND THE FEDERAL AGENCY INVOLVED IN THE PROJECT, AS WELL AS ALEXANDRIA ARCHAEOLOGY.

ENVIRONMENTAL SITE ASSESSMENT

1. THERE ARE NO TIDAL WETLANDS, TIDAL SHORES, TRIBUTARY STREAMS, CONNECTED TIDAL WETLANDS, ISOLATED WETLANDS, HIGHLY ERODIABLE/PERMEABLE SOILS OR BUFFER AREAS ASSOCIATED WITH SHORES, STREAMS, OR WETLANDS LOCATED ON THE SITE. FURTHER, THERE ARE NO WETLAND PERMITS REQUIRED FOR THIS DEVELOPMENT PROJECT. ADDITIONALLY, THERE ARE NO KNOWN UNDERGROUND STORAGE TANKS OR AREAS OF GROUNDWATER CONTAMINATION ON THE SITE.

2. THE CITY OF ALEXANDRIA DEPARTMENT OF TRANSPORTATION AND ENVIRONMENTAL SERVICES, OFFICE OF ENVIRONMENTAL QUALITY MUST BE NOTIFIED IF UNUSUAL OR UNANTICIPATED CONTAMINATION OR UNDERGROUND STORAGE TANKS, DRUMS, AND CONTAINERS ARE ENCOUNTERED AT THE SITE. IF THERE IS ANY DOUBT ABOUT PUBLIC SAFETY OR A RELEASE TO THE ENVIRONMENT, THE ALEXANDRIA FIRE DEPARTMENT MUST BE CONTACTED IMMEDIATELY BY CALLING 911. THE TANK OR CONTAINER'S REMOVAL, ITS CONTENTS, ANY SOIL CONTAMINATION AND RELEASES TO THE ENVIRONMENT WILL BE HANDLED IN ACCORDANCE WITH FEDERAL, STATE, AND CITY REGULATIONS.

3. ALL WELLS TO BE DEMOLISHED IN THIS PROJECT, INCLUDING MONITORING WELLS MUST BE CLOSED IN ACCORDANCE WITH VIRGINIA STATE WATER CONTROL BOARD (VSWCB) REQUIREMENTS. CONTACT ENVIRONMENTAL HEALTH SPECIALIST AND COORDINATE WITH THE ALEXANDRIA HEALTH DEPARTMENT AT 703-838-4400 EXT 267/255.

4. ALL CONSTRUCTION ACTIVITIES MUST COMPLY WITH THE ALEXANDRIA NOISE CONTROL CODE TITLE 11, CHAPTER 5, WHICH PERMITS CONSTRUCTION ACTIVITIES TO OCCUR BETWEEN THE FOLLOWING HOURS:
   MONDAY THROUGH FRIDAY FROM 7 AM TO 6 PM AND
   SATURDAYS FROM 9 AM TO 6 PM.
   NO CONSTRUCTION ACTIVITIES ARE PERMITTED ON SUNDAYS.

5. PILE DRIVING IS FURTHER RESTRICTED TO THE FOLLOWING HOURS:
   MONDAY THROUGH FRIDAY FROM 9 AM TO 6 PM AND
   SATURDAYS FROM 10 AM TO 4 PM.

UTILITY WORKS

UNDERGROUND UTILITY LINES SHALL BE INSTALLED IN ACCORDANCE WITH THE FOLLOWING MINIMUM STANDARDS DESCRIBED IN SECTION 4VAC50-30-40 OF THE VIRGINIA EROSION AND SEDIMENT CONTROL HANDBOOK (VESCH) AND ADDITIONAL APPLICABLE PRACTICES FOLLOWED BY THE CITY OF ALEXANDRIA:

A. ALL PRIVATE UTILITIES SHALL BE LOCATED OUTSIDE OF THE PUBLIC RIGHT-OF- WAY AND PUBLIC UTILITY EASEMENTS UNLESS THE UTILITY OWNERS HAVE FRANCHISE AGREEMENT WITH THE CITY OF ALEXANDRIA; HOWEVER, NO ELECTRIC TRANSFORMERS AND SWITCH GEARS I CONTROL BOXES SHALL BE PLACED IN THE PUBLIC RIGHT OF WAY.

B. ALL THE EXISTING AND PROPOSED PUBLIC AND PRIVATE UTILITIES AND EASEMENTS SHALL BE SHOWN AND A DESCRIPTIVE NARRATION OF VARIOUS UTILITIES SHALL BE PROVIDED ON THE PLAN.

C. IT IS THE CONTRACTOR'S RESPONSIBILITY TO MAINTAIN UTILITY SERVICES AT ALL TIMES DURING CONNECTION AND/OR CONSTRUCTION.

D. NO MORE THAN 500 LINEAR FEET OF TRENCH MAY BE OPENED AT ONE TIME.

E. EXCAVATED MATERIAL SHALL BE PLACED ON THE UPHILL SIDE OF TRENCHES.

F. EFFLUENT FROM DEWATERING OPERATIONS SHALL BE FILTERED OR PASSED THROUGH AN APPROVED SEDIMENT TRAPPING DEVICE, OR BOTH, AND DISCHARGED IN A MANNER THAT DOES NOT ADVERSELY AFFECT FLOWING STREAMS OR OFF-SITE PROPERTY.

G. MATERIAL USED FOR BACKFILLING TRENCHES SHALL BE PROPERLY COMPACTED IN ACCORDANCE WITH THE CITY OF ALEXANDRIA STANDARDS AND SPECIFICATIONS TO MINIMIZE EROSION AND PROMOTE STABILIZATION.

H. SHOULD UTILITY CONSTRUCTION BE PERFORMED AFTER COMPLETING EARTHWORK, THE CONTRACTOR SHALL BE RESPONSIBLE FOR ACHIEVING 98 PERCENT OF THE MODIFIED PROCTOR MAXIMUM DRY DENSITY (ASTM D-1551) COMPACTION IN ALL TRENCH BACKFILL.

I. RESTABILIZATION SHALL BE ACCOMPLISHED IN ACCORDANCE WITH THE VIRGINIA REGULATIONS §4VAC50-30 EROSION AND SEDIMENT CONTROL REGULATIONS, VIRGINIA EROSION AND SEDIMENT CONTROL HANDBOOK (VESCH).

J. APPLICABLE SAFETY REGULATIONS SHALL BE COMPLIED WITH.

K. THE CONTRACTOR IS RESPONSIBLE FOR INSTALLATION OF ANY ADDITIONAL CONTROL MEASURES AS NECESSARY TO PREVENT EROSION AND SEDIMENTATION, AS DETERMINED BY THE DIRECTOR OF TRANSPORTATION AND ENVIRONMENTAL SERVICES, CITY OF ALEXANDRIA.

L. A REMEDIATION PLAN SHALL BE SUBMITTED DETAILING HOW CONTAMINATED SOILS AND/OR GROUNDWATER WILL BE DEALT WITH, INCLUDING PLANS TO REMEDIATE UTILITY CORRIDORS.

M. UTILITY CORRIDORS IN CONTAMINATED SOIL SHALL BE OVER EXCAVATED BY 2 FEET AND BACKFILLED WITH "CLEAN" SOIL.

N. GRADING CAN BE PERFORMED ON INSTALLATION OF UTILITIES.

O. ALL NEW INSTALLATIONS AND/OR UTILITIES SUCH AS ELECTRICAL LINES, GAS PIPES, COMMUNICATION CABLES, INCLUDING WATER AND SEWER LATERALS BOTH ON PRIVATE PROPERTY AND IN THE PUBLIC RIGHT OF WAY IN THE CITY OF ALEXANDRIA SHALL BE PROVIDED WITH 3" AND 6" WIDE 5 MIL OVERALL THICKNESS DETECTABLE UNDERGROUND WARNING TAPE (DUWT). THE DUWT SHALL BE INSTALLED AT DEPTHS OF 12" TO 18" AND 6" WIDE AT A DEPTH OF 24" SO AS TO MAKE UNDERGROUND INSTALLATIONS EASY TO FIND USING A NON-FERROUS LOCATOR. THE DUWT SHALL BE WITH ALUMINUM BACKING OR SOLID ALUMINUM CORE LAMINATED WITH A PROTECTIVE CLEAR FILM ON BOTH SIDES, SEALING AND PROTECTING THE GRAPHICS FROM UNDERGROUND MOISTURE, ACIDS, ALKALIS, AND OTHER SOIL SUBSTANCES. ALL DUWT TAPES SHALL BE PRINTED IN BLACK INK ON AMERICAN PUBLIC WORKS ASSOCIATION (APWA) APPROVED COLORS TO MEET OR EXCEED INDUSTRY STANDARDS. THE FOLLOWING ARE THE APWA COLOR CODES:

COLOR	CODES
RED	CAUTION BURIED ELECTRIC POWER LINES,CABLES,CONDUITS,AND LIGHTING CABLES
YELLOW	CAUTION GAS, OIL, STEAM, PETROLEUM, OR GASEOUS MATERIALS
ORANGE	CAUTION COMMUNICATIONS, ALARM OR SIGNAL LINES, CABLES, OR CONDUITS
BLUE	CAUTION POTABLE WATER
PURPLE	CAUTION RECLAIMED WATER, IRRIGATION AND SLURRY
GREEN	CAUTION SEWER,DRAIN LINES,AND FORCE MAIN LINES

APPROVED
SPECIAL USE PERMIT NO.
DEPARTMENT OF PLANNING & ZONING

DIRECTOR DATE

DEPARTMENT OF TRANSPORTATION & ENVIRONMENTAL SERVICES
SITE PLAN NO. DSP2011-0027

DIRECTOR DATE

CHAIRMAN, PLANNING COMMISSION DATE

DATE RECORDED

INSTRUMENT NO. DEED BOOK NO. PAGE NO.

DATUM:
(HZ) NAD 83
(VT) NAVD 88

60% SUBMITTAL

CONTRACT NO:		REVISIONS			
PROJECT NO:		BY	NO	DATE	DESCRIPTION
	DATE:	GF	001		DEV. CONCEPT PLAN (30%)
DESIGNED:		GF	002	6/20/16	DEV. SITE PLAN
DRAFTED:					
CHECKED:					
APPROVED:					

Gannett Fleming

COMMONWEALTH OF VIRGINIA
MARTHA JEAN AVERSO
Lic. No. 17470
PROFESSIONAL ENGINEER
6-20-16

VRE

VIRGINIA RAILWAY EXPRESS

ALEXANDRIA
PEDESTRIAN TUNNEL

DISCIPLINE: GENERAL NOTES

DRAWING NO: C-001

LIST NO:

SCALE: NONE

DATE ISSUED: 6/20/16

C:\pwworking\gfpa01\smelio\d0503522\DSP-58349 C-001GN.dwg, 6/21/2016 8:21:08 AM, smelio

LEGEND

EXISTING CONDITIONS

- PROPERTY LINE
- EDGE OF ROADWAY PAVING AND GUTTER
- CURB OR CURB AND GUTTER
- EXISTING GROUND CONTOURS (10') — 30
- EXISTING GROUND CONTOURS (1') — 31
- RAILROAD
- FENCE — X — X
- FIRE HYDRANT
- EDGE OF WOODED AREAS
- TREE (FREE STANDING)
- WETLAND LIMITS
- SIGN
- LIGHT POLE
- UTILITY POLE
- STORM DRAIN
- STORM DRAIN — D — D
- SANITARY SEWER — S — S
- WATER — W — W
- GAS — G — G
- ELECTRICAL HAND BOX – SIGNALS — H.B.
- ELECTRIC — E — E
- TELEPHONE — T — T
- PLANTATION PETROLEUM LINE — P
- STORM DRAIN MANHOLE
- STORM DRAIN INLET
- SANITARY MANHOLE
- CLEANOUT — CO_o
- SANITARY STRUCTURE
- WATER VALVE
- GAS VALVE
- GAS METER
- ELEC STRUCTURE
- ELEC STRUCTURE
- ELEC VAULT — EV
- TELEPHONE STRUCTURE
- MISC. MANHOLE
- TEST HOLE
- BORING

PROPOSED CONSTRUCTION

- LIMIT OF DISTURBANCE — LOD
- GRADING ELEVATION CONTOURS (10') — 30
- STORM DRAIN PIPE
- CLEAN OUT — CO_o

ABBREVIATIONS

AASHTO	AMERICAN ASSOCIATION OF STATE HIGHWAY TRANSPORTATION OFFICIALS
ADT	AVERAGE DAILY TRAFFIC
AHD	AHEAD
APPROX.	APPROXIMATE
℄ or B/L	BASELINE
BK	BACK / BOOK
BIT.	BITUMINOUS
B.C.	BITUMINOUS CONCRETE
B.M.	BENCH MARK
BOT.	BOTTOM
C.C.	CENTER OF CURVE
CAP	CORRUGATED ALUMINUM PIPE
CAPA	CORRUGATED ALUMINUM PIPE ARCH
CATV	CABLE TELEVISION
C.B.R.	CALIFORNIA BEARING RATIO
℄ or C/L	CENTERLINE
CL.	CLASS
CLF	CHAINLINK FENCE
CMP	CORRUGATED METAL PIPE
C.O.	CLEANOUT
COMB.	COMBINATION
CONC.	CONCRETE
CONSTR.	CONSTRUCTION
COR.	CORNER
CORR.	CORRECTION
CPP–S	CORRUGATED POLYETHYLENE PIPE – TYPE 'S'
CSP	CORRUGATED STEEL PIPE – ALUMINIZED TYPE 2
CSPA	CORRUGATED STEEL PIPE ARCH – ALUMINIZED TYPE 2
DC	DEGREE OF CURVE
D.H.V.	DESIGN HOURLY VOLUME
D.I.	DROP INLET
DIA.	DIAMETER
D.O.	DOUBLE OPENING
E	EAST
E	ELECTRIC
E	EXTERNAL DISTANCE
EA	EACH
EB	EASTBOUND
ELEV	ELEVATION
ES	END SECTION
EX or EXIST	EXISTING
FT	FEET
F or FL	FLOWLINE
F.B.D.	FLAT BOTTOM DITCH
F.H.	FIRE HYDRANT
FWD.	FORWARD
G	GAS
G.V.	GAS VALVE
H.B.	HANDBOX
HDPE	HIGH DENSITY POLYETHEYLENE
HDWL.	HEADWALL
HERCP	HORIZONTAL ELLIPITICAL REINFORCED CONCRETE PIPE
HP	HIGH POINT
IN	INCH
I.S.T	INLET SEDIMENT TRAP
INV.	INVERT
J.B.	JUNCTION BOX
K	K INLET
L	LENGTH
LF	LINEAR FEET
L.L.	LIQUID LIMIT
LP	LOW POINT
L.P.	LIGHT POLE
LT.	LEFT
MAC.	MACADAM
M.C.	MOISTURE CONTENT
MAX.	MAXIMUM
M.D.D.	MAXIMUM DRY CONTENT
MOD.	MODIFIED
MIN.	MINIMUM
N	NORTH
NB	NORTHBOUND
NE	NORTHEAST
N.P.	NON–PLASTIC
O.C.	ON CENTER
OHE	OVERHEAD ELECTRIC
O.M.	OPTIMUM MOISTURE
PAV'T.	PAVEMENT
PC	POINT OF CURVATURE
PCC	POINT OF COMPOUND CURVATURE
P/C	POINT OF CROWN
P/GE	PROFILE GRADE ELEVATION
P.G.E.	PROFILE GROUND ELEVATION
P.G.L.	PROFILE GRADE LINE
P/GL	PROFILE GROUND LINE
P/R	POINT OF ROTATION
P.I.	PLASTICITY INDEX
PI	POINT OF INTERSECTION
POC	POINT ON CURVE
POT	POINT ON TANGENT
PPWP	POLYVINYL CHLORIDE PROFILE WALL PIPE
PROP	PROPOSED
PRC	POINT OF REVERSE CURVE
PT	POINT
PT	POINT OF TANGENCY
PVC	POINT OF VERTICAL CURVE
PVC	POLYVINYL CHLORIDE
PVI	POINT OF VERTICAL INTERSECTION
PVRC	POINT OF VERTICAL REVERSE CURVE
PVT	POINT OF VERTICAL TANGENCY
R	RADIUS
R.F.	ROCK FRAGMENTS
RT	RIGHT
RW or R/W	RIGHT OF WAY
RCP	REINFORCED CONCRETE PIPE
RCPP	REINFORCED CONCRETE PRESSURE PIPE
R.Q.D.	ROCK QUALITY DESIGNATION
R.M.	ROOTMAT
S	SOUTH
SAN.	SANITARY SEWER
SB or S/B	SOUTHBOUND
S.D.	STORM DRAIN
S.D.D.	SURFACE DRAIN DITCH
S/E	SUPER ELEVATION
SF	SILT FENCE
SF	SQUARE FEET
SHT.	SHEET
SPP	STRUCTURAL STEEL PLATE PIPE
SPPA	STRUCTURAL STEEL PLATE PIPE ARCH
S.P.T.	STANDARD PENETRATION TESTING
SRP	STEEL SPIRAL RIB PIPE – ALUMINIZED TYPE 2
SRPA	STEEL SPIRAL RIB PIPE ARCH – ALUMINIZED TYPE 2
SSD	STOPPING SIGHT DISTANCE
SSF	SUPER SILT FENCE
STD.	STANDARD
STA.	STATION
SO.	SINGLE OPENING
SY	SQUARE YARDS
SWM	STORMWATER MANAGEMENT
T	TANGENT
T	TELEPHONE
T.C.	TOP OF COVER
T.G.	TOP OF GRATE
T or TL	TRAVERSE LINE
T.M.	TOP OF MANHOLE
TRAV.	TRAVERSE
TS	TEMPORARY SWALE
T.S.	TOP OF SLAB
T.S.	TOPSOIL
TYP.	TYPICAL
U.D.	UNDER DRAIN
U.G.	UNDERGROUND
U.P.	UTILITY POLE
USDA	UNITED STATES DEPARTMENT OF AGRICULTURE
VCL	VERTICAL CLEARANCE
V.C.L.	VERTICAL CURVE LENGTH
W	WATER
W	WEST
WB	WESTBOUND
WB	WETLAND BUFFER
W.M.	WATER METER
W.S.	WRAPPED STEEL
WUS	WATERS OF THE UNITED STATES
W.V.	WATER VALVE

MISS UTILITY OF VIRGINIA – DESIGN UTILITY TICKET DATA

TICKET : A519502543 REV: 00A TAKEN: 07/14/15 04:14 PM
STATE: VA CNTY: ALEXANDRIA CITY PLACE:
ADDRESS: 110 CALLAHAN DR

MARKING CODE	DESCRIPTION	RESPONSE
ALR	ALEXANDRIA RENEW – SEWER (ALR549) 07/15/15 02:16 PM 30 NO CONFLICT; UTILITY IS OUTSIDE OF STATED WORK AREA. FIELD CONTACT: JUSTIN LILLY (571)422–0047 IN THE EVENT OF DAMAGE TO A FACILITY CALL: (703)549–3381	
ALX	ALEXANDRIA CITY UTILITIES (ALX901) 08/03/15 03:14 PM 52 RECORDS REGARDING PRIVATE SEWER LATERALS HAVE BEEN PROVIDED ON AN ACCESSIBLE ELECTRONIC SYSTEM. FIELD CONTACT: BILL JONES (571)243–4630 IN THE EVENT OF DAMAGE TO A FACILITY CALL: (571)447–8871	
ATT	AT&T (ATT392) 08/03/15 03:22 PM 70 CRITICAL FACILITY MARKED. LOCATOR OR UTILITY OPERATOR MUST CONTACT EXCAVATOR AND MUST BE PRESENT DURING EXCAVATION FIELD CONTACT: LINARD MILLER (703)624–4956 IN THE EVENT OF DAMAGE TO A FACILITY CALL: (800)252–1133	
CMC	COMCAST (CMC259) 08/04/15 02:42 PM 30 NO CONFLICT; UTILITY IS OUTSIDE OF STATED WORK AREA. FIELD CONTACT: S & N (804)608–5640 IN THE EVENT OF DAMAGE TO A FACILITY CALL: (800)441–6917 EXT OPT 1	
DOM	DOMINION VA POWER ELEC DI (DOM400) 08/04/15 12:25 PM 32 NO CONFLICT; PRIVATELY OWNED UTILITY ON PROPERTY. CONTACT PRIVATE UTILITY OWNER FOR LOCATE. FIELD CONTACT: UTILIQUEST (703)754–2116 IN THE EVENT OF DAMAGE TO A FACILITY CALL: (888)667–3000	
DOM	DOMINION VA POWER COMMUNI (DOM711) 08/04/15 02:42 PM 30 NO CONFLICT; UTILITY IS OUTSIDE OF STATED WORK AREA. FIELD CONTACT: S & N (804)608–5640 IN THE EVENT OF DAMAGE TO A FACILITY CALL: (804)771–4862	
FBL	FIBERLIGHT (FBL410) 08/04/15 09:40 PM 30 NO CONFLICT; UTILITY IS OUTSIDE OF STATED WORK AREA. FIELD CONTACT: PERRY JACKSON (240)994–0305 IN THE EVENT OF DAMAGE TO A FACILITY CALL: (800)672–0181	
LTC	LEVEL 3 COMMUNICATIONS (LTC903) 08/04/15 08:56 PM 30 NO CONFLICT; UTILITY IS OUTSIDE OF STATED WORK AREA. FIELD CONTACT: CALL CENTER (877)366–8344 IN THE EVENT OF DAMAGE TO A FACILITY CALL: (877)366–8344	
MCI	MCI (MCI181) 08/05/15 06:56 AM 10 MARKED FIELD CONTACT: DISPATCHER (800)289–3427 IN THE EVENT OF DAMAGE TO A FACILITY CALL: (800)289–3427	
OBV	OPENBAND OF VIRGINIA (OBV901) 07/15/15 05:49 AM 30 NO CONFLICT; UTILITY IS OUTSIDE OF STATED WORK AREA. FIELD CONTACT: JOHN RUESCHENBERG (571)239–9952 IN THE EVENT OF DAMAGE TO A FACILITY CALL: (571)239–9952	
PPL	PLANTATION PIPELINE (PPL003) 07/15/15 09:18 AM 30 NO CONFLICT; UTILITY IS OUTSIDE OF STATED WORK AREA. FIELD CONTACT: TIM PATTERSON (703)861–2198 IN THE EVENT OF DAMAGE TO A FACILITY CALL: (800)510–5678	
QGS	QWEST GOVERNMENT SERVICES (QGS901) 08/06/15 01:24 AM 70 CRITICAL FACILITY MARKED. LOCATOR OR UTILITY OPERATOR MUST CONTACT EXCAVATOR AND MUST BE PRESENT DURING EXCAVATION FIELD CONTACT: DISPATCH (703)464–7592 IN THE EVENT OF DAMAGE TO A FACILITY CALL: (703)464–7592	
QWE	QWEST COMMUNICATIONS (QWE901) 08/04/15 06:11 PM 10 MARKED FIELD CONTACT: OPERATIONS CENTER (800)283–4237 IN THE EVENT OF DAMAGE TO A FACILITY CALL: (800)283–4237	
VAW	VIRGINIA AMERICAN WATER (VAW903) 08/04/15 12:25 PM 30 NO CONFLICT; UTILITY IS OUTSIDE OF STATED WORK AREA. FIELD CONTACT: UTILIQUEST (703)754–2116 IN THE EVENT OF DAMAGE TO A FACILITY CALL: (800)452–6863	
VZN	VERIZON (VZN005) 07/14/15 04:42 PM 30 NO CONFLICT; UTILITY IS OUTSIDE OF STATED WORK AREA. FIELD CONTACT: S & N (804)608–5640 IN THE EVENT OF DAMAGE TO A FACILITY CALL: (877)562–2253	
WGL	WASHINGTON GAS (WGL904) 08/04/15 12:25 PM 30 NO CONFLICT; UTILITY IS OUTSIDE OF STATED WORK AREA. FIELD CONTACT: UTILIQUEST (703)754–2116 IN THE EVENT OF DAMAGE TO A FACILITY CALL: (800)752–7520	
WXN	WINDSTREAM KDL (WXN456) 08/05/15 07:44 AM 96 NO RESPONSE REQUIRED FROM THIS TERMINAL. FIELD CONTACT: DAMAGE PREVENTION GROUP (888)599–3166 IN THE EVENT OF DAMAGE TO A FACILITY CALL: (804)400–9744	
ZAY	ZAYO – COMMUNICATIONS (ZAY828) 08/03/15 03:29 PM 30 NO CONFLICT; UTILITY IS OUTSIDE OF STATED WORK AREA. FIELD CONTACT: STAKE CENTER LOCATING (801)364–1063 IN THE EVENT OF DAMAGE TO A FACILITY CALL: (866)236–2824	

DATUM:
(HZ) NAD 83
(VT) NAVD 88

APPROVED
SPECIAL USE PERMIT NO.
DEPARTMENT OF PLANNING & ZONING
DIRECTOR DATE
DEPARTMENT OF TRANSPORTATION & ENVIRONMENTAL SERVICES
SITE PLAN NO. DSP2011-0027
DIRECTOR DATE
CHAIRMAN, PLANNING COMMISSION DATE
DATE RECORDED
INSTRUMENT NO. DEED BOOK NO. PAGE NO.

60% SUBMITTAL

CONTRACT NO:	REVISIONS				
PROJECT NO:	BY	NO	DATE	DESCRIPTION	
	GF	001		DEV. CONCEPT PLAN (30%)	
DATE:	GF	002	6/20/16	DEV. SITE PLAN	
DESIGNED:					
DRAFTED:					
CHECKED:					
APPROVED:					

Gannett Fleming

COMMONWEALTH OF VIRGINIA
MARTHA JEAN AVERSO
Lic. No. 17470
PROFESSIONAL ENGINEER
6-20-16

VRE

VIRGINIA RAILWAY EXPRESS

ALEXANDRIA
PEDESTRIAN TUNNEL

DISCIPLINE:
CIVIL
LEGEND AND ABBREVIATIONS

DRAWING NO:
C-002

LIST NO:

SCALE: NONE

DATE ISSUED: 6/20/16

C:\pwworking\gfpw01\smello\d0593522\DSP-58349 C-002LEG.dwg, 6/21/2016 8:22:48 AM, smello

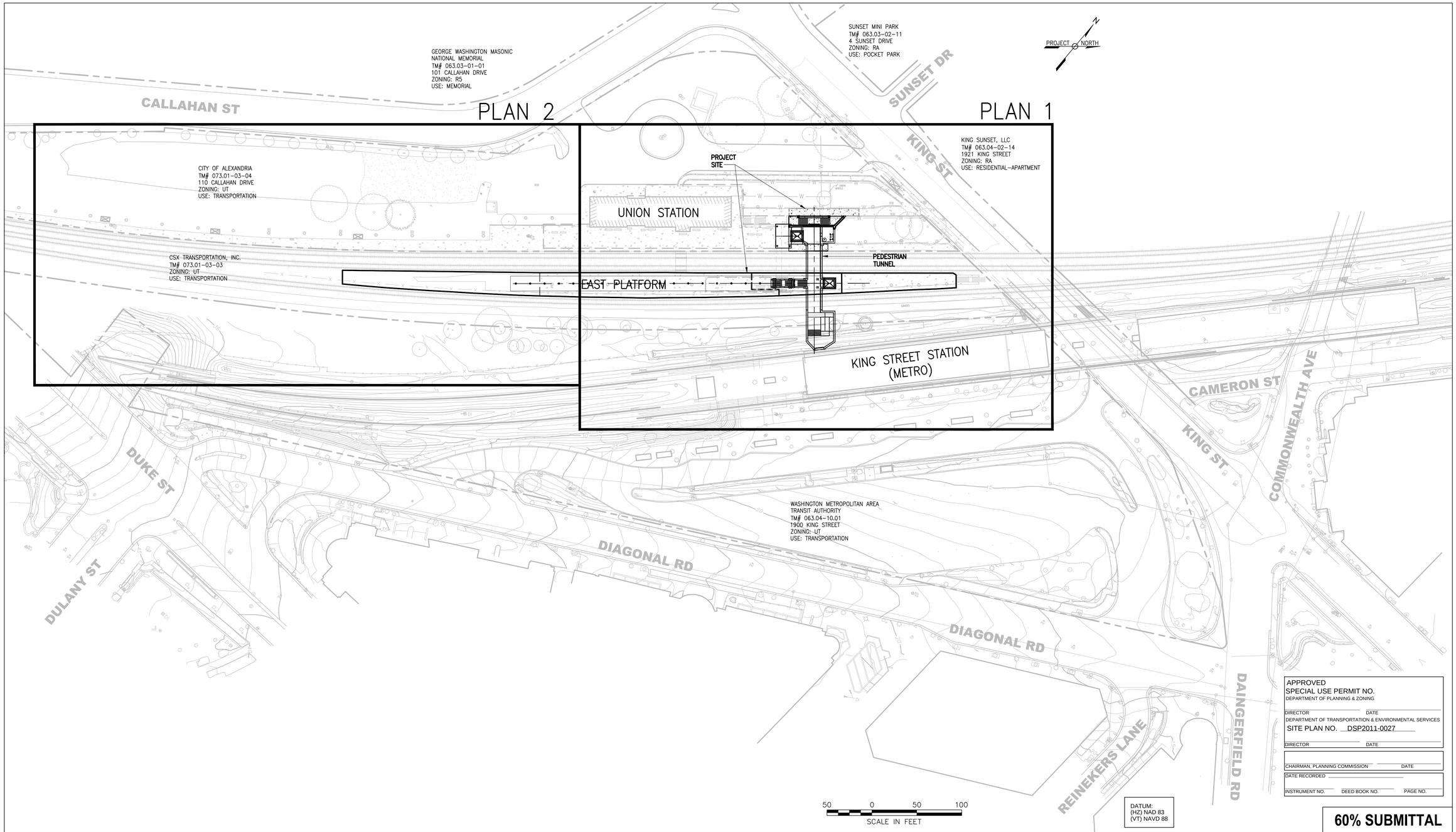

DATUM:
(HZ) NAD 83
(VT) NAVD 88

APPROVED
SPECIAL USE PERMIT NO.
DEPARTMENT OF PLANNING & ZONING

DIRECTOR DATE

DEPARTMENT OF TRANSPORTATION & ENVIRONMENTAL SERVICES
SITE PLAN NO. DSP2011-0027

DIRECTOR DATE

CHAIRMAN, PLANNING COMMISSION DATE

DATE RECORDED

INSTRUMENT NO. DEED BOOK NO. PAGE NO.

60% SUBMITTAL

CONTRACT NO:	
PROJECT NO:	
DATE:	
DESIGNED:	
DRAFTED:	
CHECKED:	
APPROVED:	

REVISIONS

BY	NO	DATE	DESCRIPTION
GF	001		DEV. CONCEPT PLAN (30%)
GF	002	6/20/16	DEV. SITE PLAN

Gannett Fleming

COMMONWEALTH OF VIRGINIA
MARTHA JEAN AVERSO
Lic. No. 17470
PROFESSIONAL ENGINEER
6-20-16

VRE

VIRGINIA RAILWAY EXPRESS

ALEXANDRIA
PEDESTRIAN TUNNEL

DISCIPLINE:
CIVIL
OVERALL SITE PLAN /
CONTEXTUAL PLAN

SCALE: 1"=50'

DATE ISSUED: 6/20/16

DRAWING NO: C-101

LIST NO:

C:\pwworking\gfpw01\smello\d0593522\DSP-58349 C-101DSP.dwg, 6/21/2016 8:25:18 AM, smello

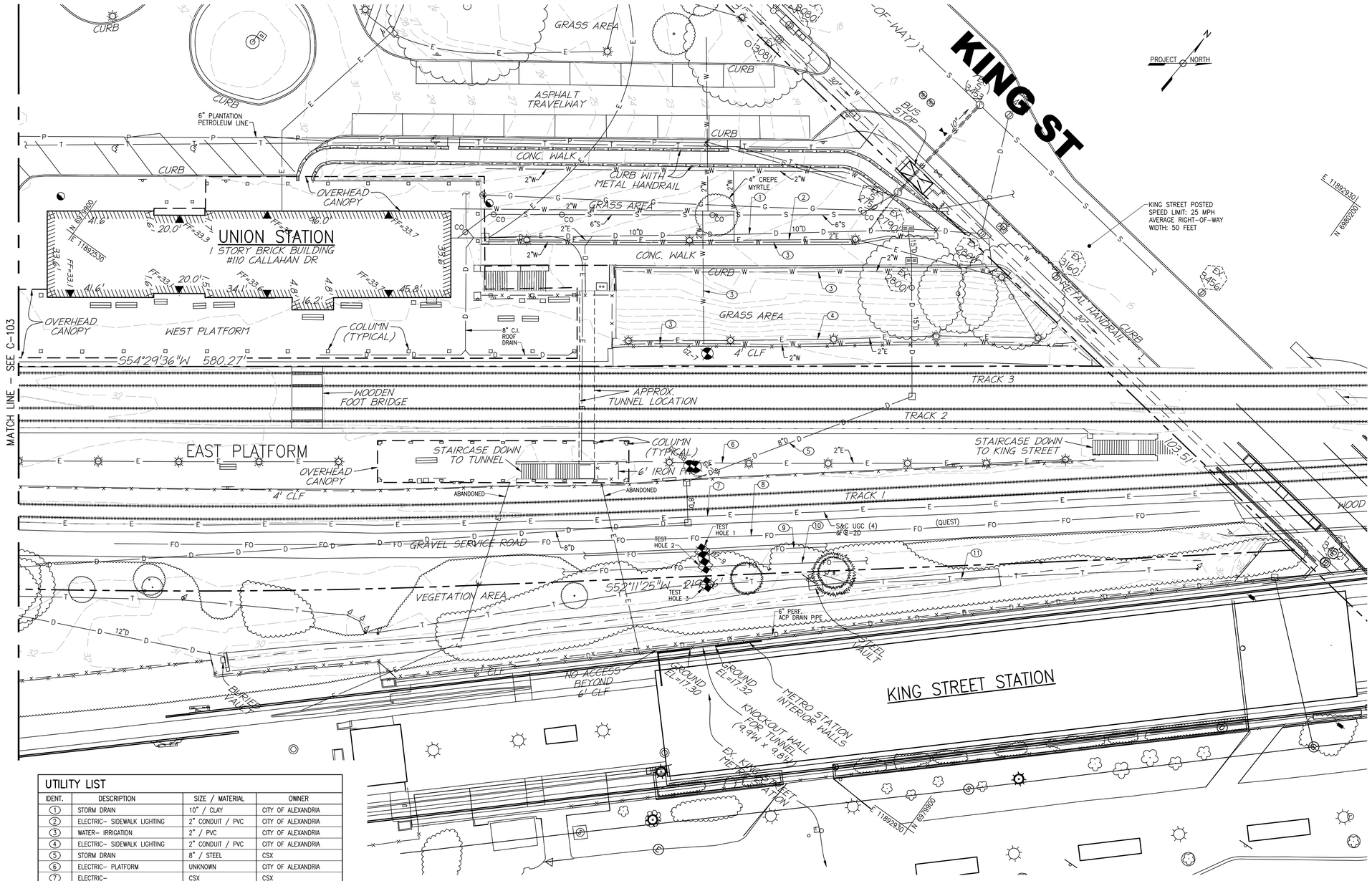

GENERAL NOTES

1. EXISTING TOPOGRAPHY FOR THE UNION STATION SITE IS BASED ON FIELD RUN SURVEYS PERFORMED BY CHRISTOPHER CONSULTANTS DATED JANUARY AND APRIL 2015.
2. HORIZONTAL DATUM: NAD 83.
3. VERTICAL DATUM: NAVD 88.
4. THE UNDERGROUND UTILITIES SHOWN ARE BASED ON EXISTING DRAWINGS AND LOCATION OF SURFACE FEATURES. THE OWNER DOES NOT WARRANT OR GUARANTEE THE ACCURACY OF THIS PORTRAYAL.
5. THE CONTRACTOR SHALL NOTIFY "MISS UTILITY OF VIRGINIA" AT 811 AT LEAST THREE WORKING DAYS PRIOR TO COMMENCING WORK ON THIS PROJECT TO ARRANGE FOR UTILITY LOCATION AND MARKING. NO WORK CAN PROCEED UNTIL UTILITY MARKING IS COMPLETE.
6. FOR AREAS AND/OR UTILITIES WHICH "MISS UTILITY OF VIRGINIA" WILL NOT LOCATE, THE CONTRACTOR SHALL UTILIZE THE SERVICES OF A PRIVATE UTILITY LOCATOR TO IDENTIFY THE LOCATION OF SUBSURFACE UTILITIES WITHIN THE LIMITS OF WORK.
7. PROPERTY LINES ARE BASED ON FIELD SURVEYS PERFORMED BY CHRISTOPHER CONSULTANTS DATED FEBRUARY 2000 AND AVAILABLE DEEDS AND PLATS OF RECORD.
8. THE SITE HAS NO KNOWN AREAS OF MARINE CLAY.
9. THERE IS NO KNOWN OR EXPECTED CONTAMINATION ON THE SITE. A PRELIMINARY SITE ASSESSMENT WAS PERFORMED BY CARDNO MM&A, ON DECEMBER 14, 2012 WHICH DOCUMENTS THE EXISTING CONDITION.

UTILITY LIST

IDENT.	DESCRIPTION	SIZE / MATERIAL	OWNER
1	STORM DRAIN	10" / CLAY	CITY OF ALEXANDRIA
2	ELECTRIC– SIDEWALK LIGHTING	2" CONDUIT / PVC	CITY OF ALEXANDRIA
3	WATER– IRRIGATION	2" / PVC	CITY OF ALEXANDRIA
4	ELECTRIC– SIDEWALK LIGHTING	2" CONDUIT / PVC	CITY OF ALEXANDRIA
5	STORM DRAIN	8" / STEEL	CSX
6	ELECTRIC– PLATFORM	UNKNOWN	CITY OF ALEXANDRIA
7	ELECTRIC–	CSX	CSX
8	FIBER OPTIC	3–1 1/4" & 2–2"C	QWEST
9	FIBER OPTIC	3–1 1/4" & 2–2"C	AT&T
10	FIBER OPTIC	UNKNOWN	VERIZON
11	TELE / COMM	6–2"C	MCI

SCALE IN FEET: 20 0 20 40

DATUM:
(HZ) NAD 83
(VT) NAVD 88

APPROVED
SPECIAL USE PERMIT NO.
DEPARTMENT OF PLANNING & ZONING

DIRECTOR DATE

DEPARTMENT OF TRANSPORTATION & ENVIRONMENTAL SERVICES
SITE PLAN NO. DSP2011-0027

DIRECTOR DATE

CHAIRMAN, PLANNING COMMISSION DATE

DATE RECORDED

INSTRUMENT NO. DEED BOOK NO. PAGE NO.

60% SUBMITTAL

CONTRACT NO:	
PROJECT NO:	
DATE:	
DESIGNED:	
DRAFTED:	
CHECKED:	
APPROVED:	

REVISIONS

BY	NO	DATE	DESCRIPTION
GF	001		DEV. CONCEPT PLAN (30%)
GF	002	6/20/16	DEV. SITE PLAN

Gannett Fleming

COMMONWEALTH OF VIRGINIA
MARTHA JEAN AVERSO
Lic. No. 17470
PROFESSIONAL ENGINEER
6-20-16

VRE

VIRGINIA RAILWAY EXPRESS

ALEXANDRIA
PEDESTRIAN TUNNEL

DISCIPLINE:
CIVIL
EXISTING CONDITIONS PLAN 1

DRAWING NO:
C-102

LIST NO:

SCALE: 1"=20'

DATE ISSUED: 6/20/16

C:\pwworking\gfpw01\smello\d0593522\DSP_SB349 C-102ECP.dwg, 6/21/2016 8:27:25 AM, smello

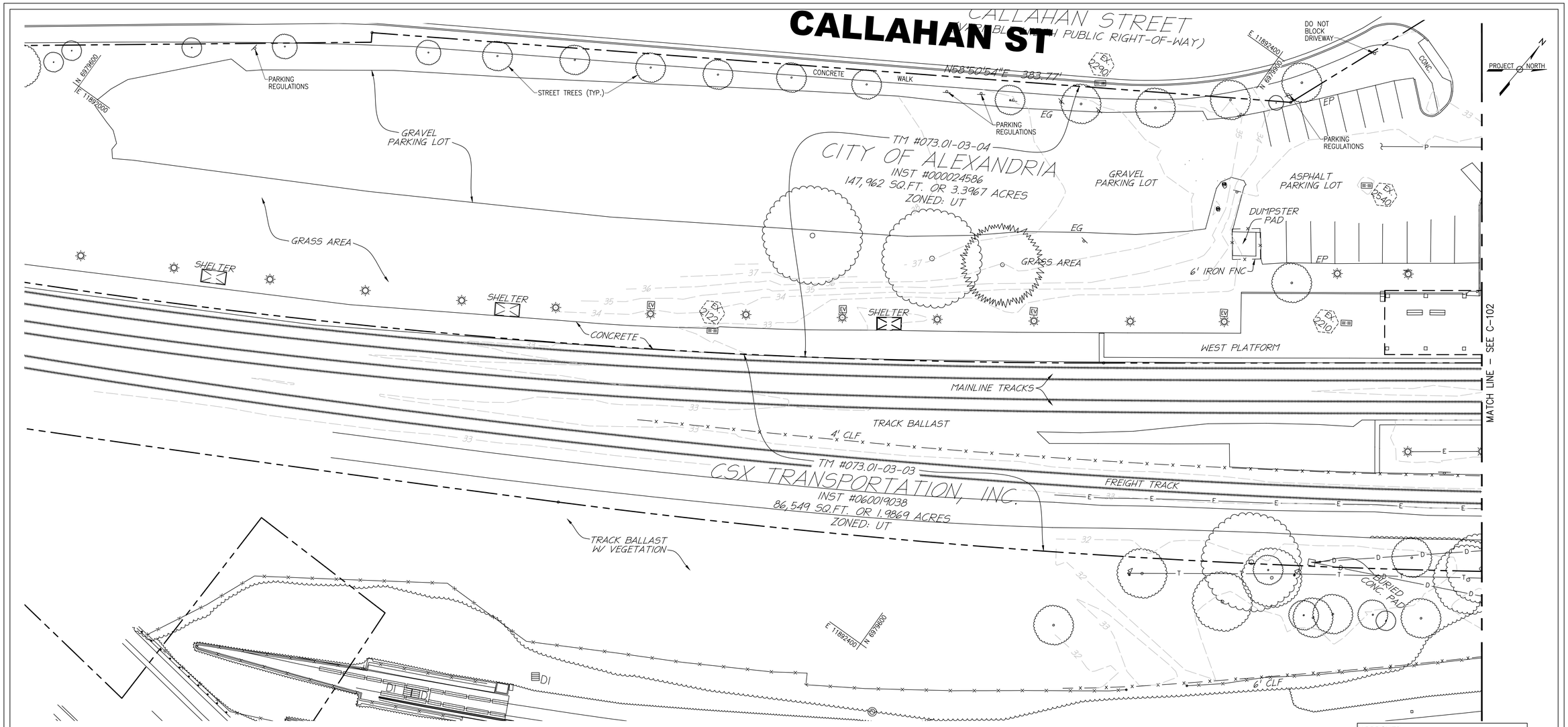

APPROVED
SPECIAL USE PERMIT NO.
DEPARTMENT OF PLANNING & ZONING

DIRECTOR DATE

DEPARTMENT OF TRANSPORTATION & ENVIRONMENTAL SERVICES
SITE PLAN NO. DSP2011-0027

DIRECTOR DATE

CHAIRMAN, PLANNING COMMISSION DATE

DATE RECORDED

INSTRUMENT NO. DEED BOOK NO. PAGE NO.

20 0 20 40
SCALE IN FEET

DATUM:
(HZ) NAD 83
(VT) NAVD 88

60% SUBMITTAL

CONTRACT NO:	
PROJECT NO:	
	DATE:
DESIGNED:	
DRAFTED:	
CHECKED:	
APPROVED:	

REVISIONS

BY	NO	DATE	DESCRIPTION
GF	001		DEV. CONCEPT PLAN (30%)
GF	002	6/20/16	DEV. SITE PLAN

Gannett Fleming

COMMONWEALTH OF VIRGINIA
MARTHA JEAN AVERSO
Lic. No. 17470
PROFESSIONAL ENGINEER
6-20-16

VRE

VIRGINIA RAILWAY EXPRESS

ALEXANDRIA
PEDESTRIAN TUNNEL

DISCIPLINE:
CIVIL
EXISTING CONDITIONS PLAN 2

SCALE: 1"=20'

DATE ISSUED: 6/20/16

DRAWING NO: C-103

LIST NO:

C:\pwworking\gfpw01\smello\d0593522\DSP-58349 C-102ECP.dwg, 6/21/2016 8:28:07 AM, smello

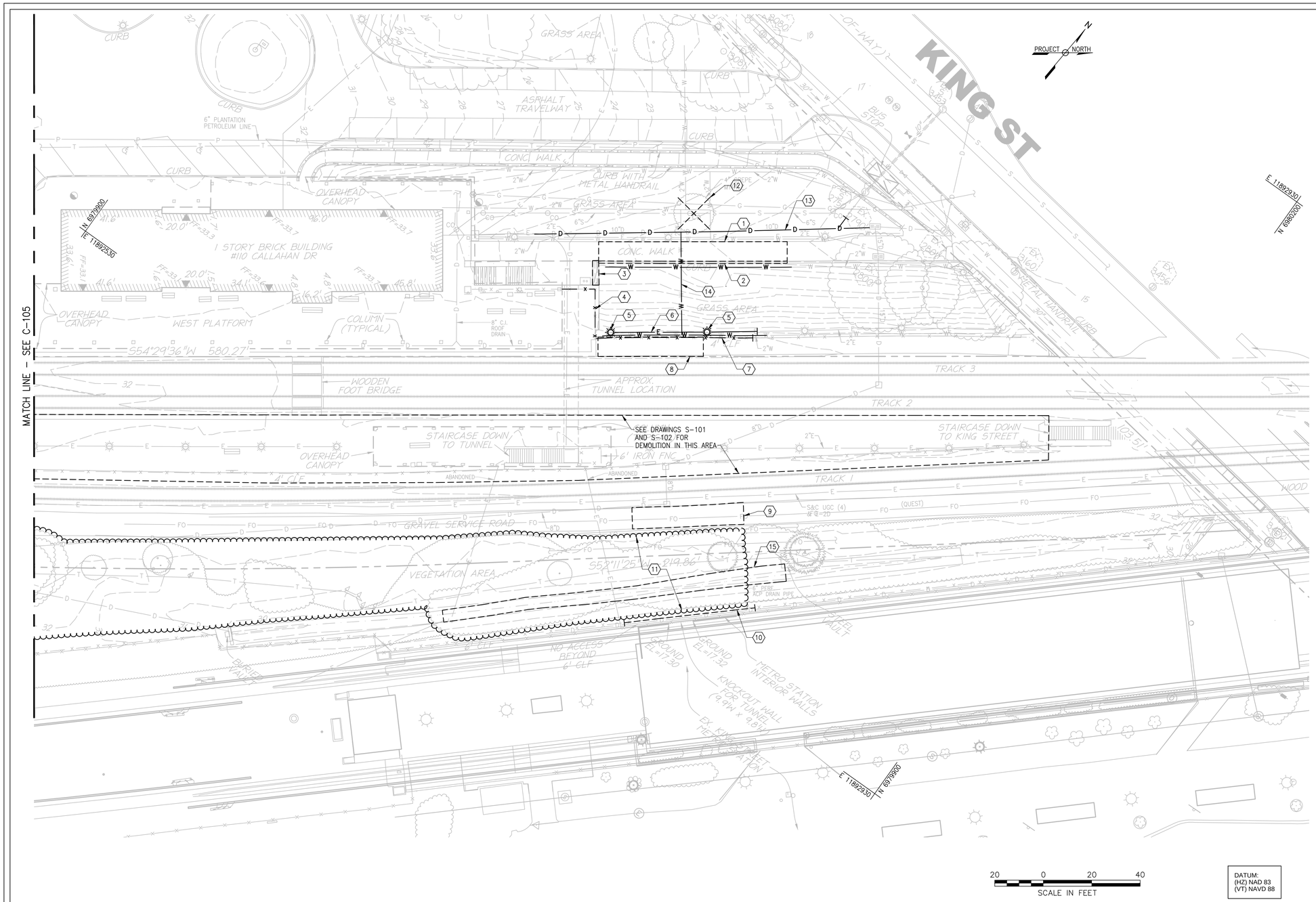

LEGEND

DEMOLITION

NOTES

1. CONSTRUCTION/DEMOLITION ACTIVITIES CANNOT INTERFERE IN ANYWAY WITH EXISTING RAIL AND PASSENGER TRANSPORT OPERATIONS.
2. ALL NECESSARY EROSION AND SEDIMENT CONTROLS MUST BE IN PLACE AND FUNCTIONAL PRIOR TO COMMENCEMENT OF CONSTRUCTION ACTIVITIES.
3. STRUCTURE DEMOLITION SHALL BE PERFORMED IN ACCORDANCE WITH THE STRUCTURAL DEMOLITION DRAWINGS.
4. PROTECT AND PRESERVE ALL EXISTING UNDERGROUND UTILITY MARKERS.
5. DEMOLISH THE EXISTING CANOPY AS SHOWN ON THE CANOPY DEMOLITION PLAN ON DRAWING NO. S-103 VERIFY.
6. CONTRACTOR TO VERIFY THE LOCATION AND CAP AND SEAL THE EXISTING CANOPY UNDERGROUND.
7. DISPOSAL OF DEMOLITION WASTES SHALL BE ADDRESSED IN ACCORDANCE WITH SPECIFICATION.

DEMOLITION NOTES

1. REMOVE 6" THICK CONCRETE SIDEWALK AND AGGREGATE BASE
2. REMOVE CONCRETE CURB
3. REMOVE MASONRY KNEE WALL
4. REMOVE 4' HIGH CHAIN LINK FENCE, POSTS AND FABRIC
5. REMOVE LIGHT POLE (SALVAGE AND RE-USE)
6. REMOVE CONDUIT AND WIRE
7. REMOVE 4' HIGH CHAIN LINK FENCE, POSTS AND FABRIC
8. REMOVE CONCRETE PLATFORM
9. REMOVE 12" THICK GRAVEL SERVICE ROAD
10. REMOVE 6' HIGH CHAIN LINK FENCE
11. REMOVE TREES, SHRUBS AND STUMPS
12. REMOVE TREE
13. REMOVE 10" STORM DRAIN
14. REMOVE 2" WATER
15. REMOVE DRAINAGE CHANNEL

APPROVED
SPECIAL USE PERMIT NO.
DEPARTMENT OF PLANNING & ZONING

DIRECTOR DATE

DEPARTMENT OF TRANSPORTATION & ENVIRONMENTAL SERVICES
SITE PLAN NO. DSP2011-0027

DIRECTOR DATE

CHAIRMAN, PLANNING COMMISSION DATE

DATE RECORDED

INSTRUMENT NO. DEED BOOK NO. PAGE NO.

20 0 20 40
SCALE IN FEET

DATUM:
(HZ) NAD 83
(VT) NAVD 88

60% SUBMITTAL

CONTRACT NO:	
PROJECT NO:	
	DATE:
DESIGNED:	
DRAFTED:	
CHECKED:	
APPROVED:	

REVISIONS

BY	NO	DATE	DESCRIPTION
GF	001		DEV. CONCEPT PLAN (30%)
GF	002	6/20/16	DEV. SITE PLAN

Gannett Fleming

COMMONWEALTH OF VIRGINIA
MARTHA JEAN AVERSO
Lic. No. 17470
PROFESSIONAL ENGINEER
6-20-16

VIRGINIA RAILWAY EXPRESS

ALEXANDRIA
PEDESTRIAN TUNNEL

DISCIPLINE:
CIVIL
DEMOLITION PLAN 1

SCALE: 1"=20'

DATE ISSUED: 6/20/16

DRAWING NO: C-104

LIST NO:

C:\pwworking\gfpw01\smello\d0593522\DSP-58349 C-104DEM.dwg, 6/21/2016 8:29:55 AM, smello

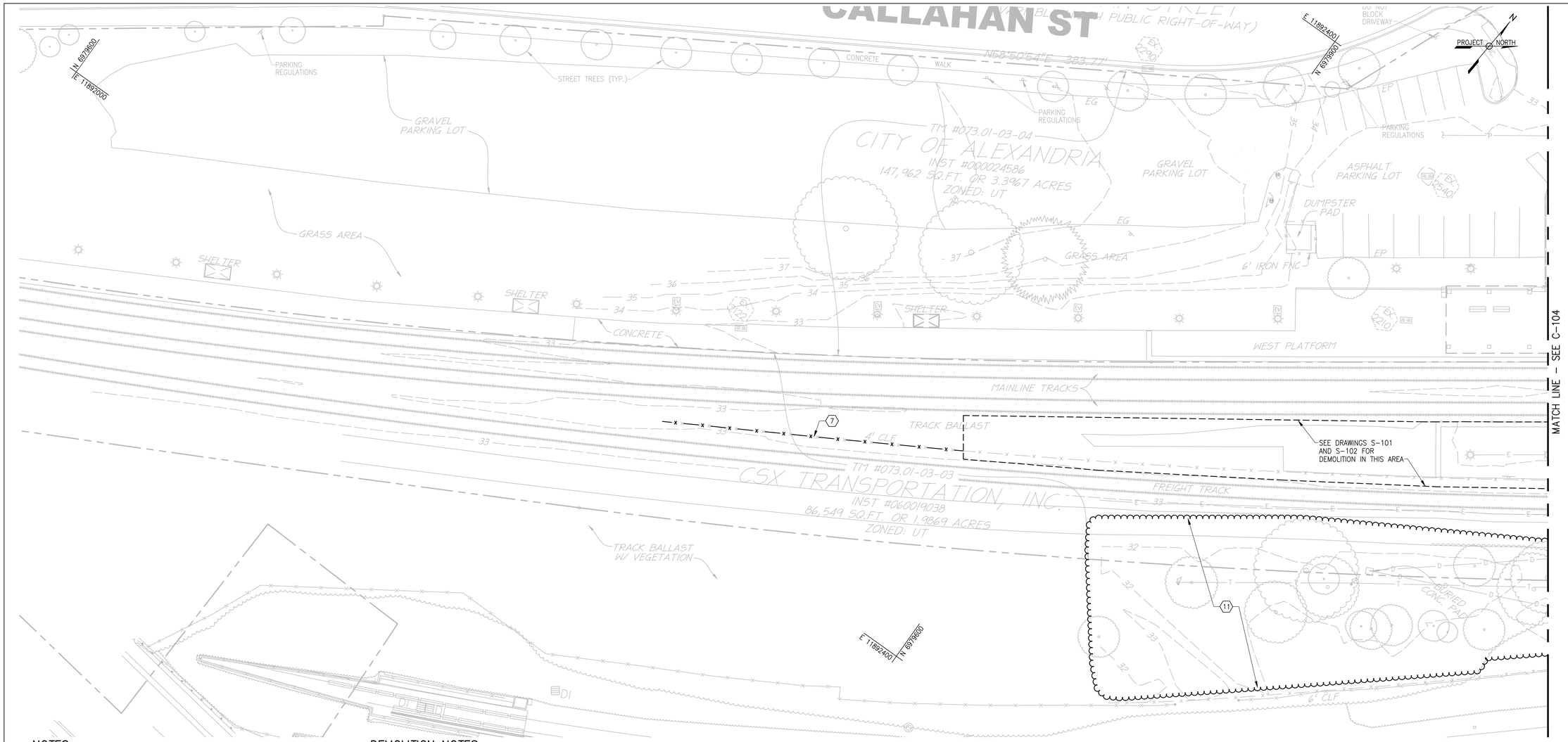

NOTES

1. CONSTRUCTION/DEMOLITION ACTIVITIES CANNOT INTERFERE IN ANYWAY WITH EXISTING RAIL OPERATIONS.
2. ALL NECESSARY EROSION AND SEDIMENT CONTROLS MUST BE IN PLACE AND FUNCTIONAL PRIOR TO COMMENCEMENT OF CONSTRUCTION ACTIVITIES.
3. STRUCTURE DEMOLITION SHALL BE PERFORMED IN ACCORDANCE WITH THE STRUCTURAL DEMOLITION DRAWINGS.
4. DISPOSAL OF DEMOLITION WASTES SHALL BE ADDRESSED IN ACCORDANCE WITH SPECIFICATIONS.

LEGEND

DEMOLITION

DEMOLITION NOTES

1. REMOVE 6" THICK CONCRETE SIDEWALK AND AGGREGATE BASE
2. REMOVE CONCRETE CURB
3. REMOVE MASONRY KNEE WALL
4. REMOVE 4' HIGH CHAIN LINK FENCE, POSTS AND FABRIC
5. REMOVE LIGHT POLE (SALVAGE)
6. REMOVE CONDUIT AND WIRE
7. REMOVE 4' HIGH CHAIN LINK FENCE, POSTS AND FABRIC
8. REMOVE CONCRETE PLATFORM
9. REMOVE 12" THICK GRAVEL SERVICE ROAD
10. REMOVE 6' HIGH CHAIN LINK FENCE
11. REMOVE TREES, SHRUBS AND STUMPS

20 0 20 40
SCALE IN FEET

DATUM:
(HZ) NAD 83
(VT) NAVD 88

APPROVED
SPECIAL USE PERMIT NO.
DEPARTMENT OF PLANNING & ZONING
DIRECTOR DATE
DEPARTMENT OF TRANSPORTATION & ENVIRONMENTAL SERVICES
SITE PLAN NO. DSP2011-0027
DIRECTOR DATE
CHAIRMAN, PLANNING COMMISSION DATE
DATE RECORDED
INSTRUMENT NO. DEED BOOK NO. PAGE NO.

60% SUBMITTAL

CONTRACT NO:		REVISIONS			
PROJECT NO:		BY	NO	DATE	DESCRIPTION
	DATE:	GF	001		DEV. CONCEPT PLAN (30%)
DESIGNED:		GF	002	6/20/16	DEV. SITE PLAN
DRAFTED:					
CHECKED:					
APPROVED:					

Gannett Fleming

COMMONWEALTH OF VIRGINIA
MARTHA JEAN AVERSO
Lic. No. 17470
PROFESSIONAL ENGINEER
6-20-16

VRE

VIRGINIA RAILWAY EXPRESS

ALEXANDRIA
PEDESTRIAN TUNNEL

DISCIPLINE:
CIVIL
DEMOLITION PLAN 2

DRAWING NO:
C-105

SCALE: 1"=20'

DATE ISSUED: 6/20/16

LIST NO:

C:\pwworking\gf\pw01\smello\d0593522\DSP-58349 C-104DEM.dwg, 6/21/2016 8:30:41 AM, smello

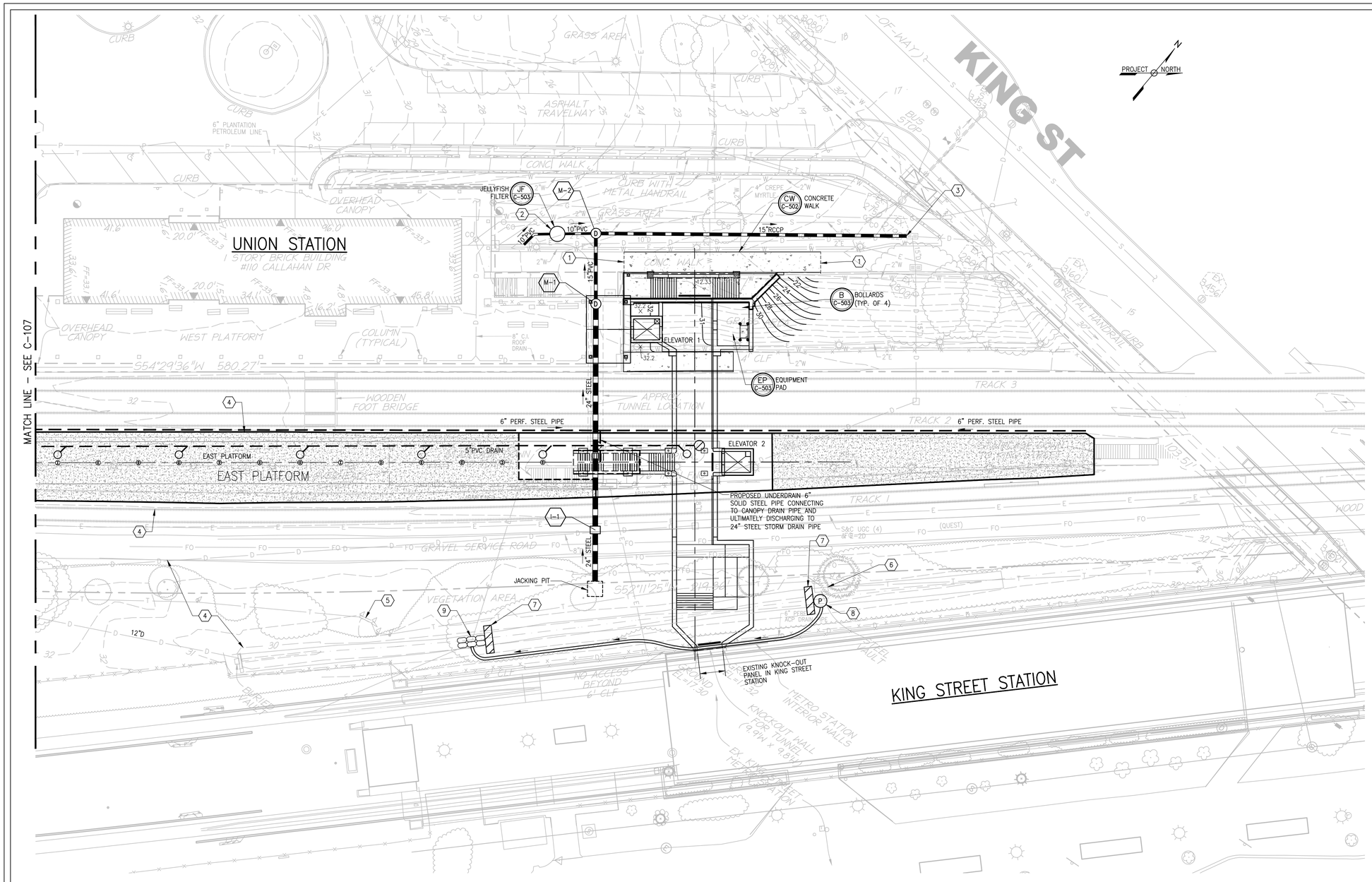

CONSTRUCTION NOTES

1. SAW CUT SIDEWALK TO BE REMOVED AT EX. JOINT LOCATION. NEW SIDEWALK TO MATCH EXISTING SIDEWALK ELEVATION.
2. INSTALL CONTECH JELLYFISH FILTER STORMWATER FILTRATION SYSTEM, MODEL JF6-4-1, PER THE LOCATION AND ELEVATIONS APPROVED, AND IN ACCORDANCE WITH THE MANUFACTURER'S RECOMMENDATIONS, STANDARD DETAILS, AND GENERAL NOTES HEREON.
3. CONNECT TO EXISTING STORM DRAIN INLET.
4. RESTORE DISTURBED SURFACE WITH 12" BALLAST.
5. PROTECT EXISTING UTILITY MARKERS.
6. PROTECT EXISTING UTILITY VAULT.
7. SAND BASE DIKE AT LIMITS OF OPEN CHANNEL TO REMAIN.
8. PUMP AROUND – PUMP AND FORCE MAIN.
9. RIP RAP SPLASH PAD AT FORCE MAIN DISCHARGE.

GENERAL NOTES

1. CALL ALEXANDRIA ARCHAEOLOGY IF ARTIFACTS OR OLD STRUCTURAL REMAINS ARE UNCOVERED. NO METAL DETECTING, OTHER THAN UTILITY LOCATING, ALLOWED DURING THE PROJECT.
2. ALLOW NO METAL DETECTING ON THE PROPERTY WITHOUT AUTHORIZATION OF ALEXANDRIA ARCHAEOLOGY.

APPROVED
SPECIAL USE PERMIT NO.
DEPARTMENT OF PLANNING & ZONING
DIRECTOR DATE
DEPARTMENT OF TRANSPORTATION & ENVIRONMENTAL SERVICES
SITE PLAN NO. DSP2011-0027
DIRECTOR DATE
CHAIRMAN, PLANNING COMMISSION DATE
DATE RECORDED
INSTRUMENT NO. DEED BOOK NO. PAGE NO.

20 0 20 40
SCALE IN FEET

DATUM:
(HZ) NAD 83
(VT) NAVD 88

60% SUBMITTAL

CONTRACT NO:	
PROJECT NO:	
	DATE:
DESIGNED:	
DRAFTED:	
CHECKED:	
APPROVED:	

REVISIONS

BY	NO	DATE	DESCRIPTION
GF	001		DEV. CONCEPT PLAN (30%)
GF	002	6/20/16	DEV. SITE PLAN

Gannett Fleming

COMMONWEALTH OF VIRGINIA
MARTHA JEAN AVERSO
Lic. No. 17470
PROFESSIONAL ENGINEER
6-20-16

VRE

VIRGINIA RAILWAY EXPRESS

ALEXANDRIA
PEDESTRIAN TUNNEL

DISCIPLINE:
CIVIL
GRADING AND DRAINAGE PLAN 1

DRAWING NO:
C-106

LIST NO:

SCALE: 1"=20'

DATE ISSUED: 6/20/16

C:\pwworking\gfpw01\smellis\d0593522\DSP-58349 C-106GD.dwg, 6/21/2016 8:33:21 AM, smellis

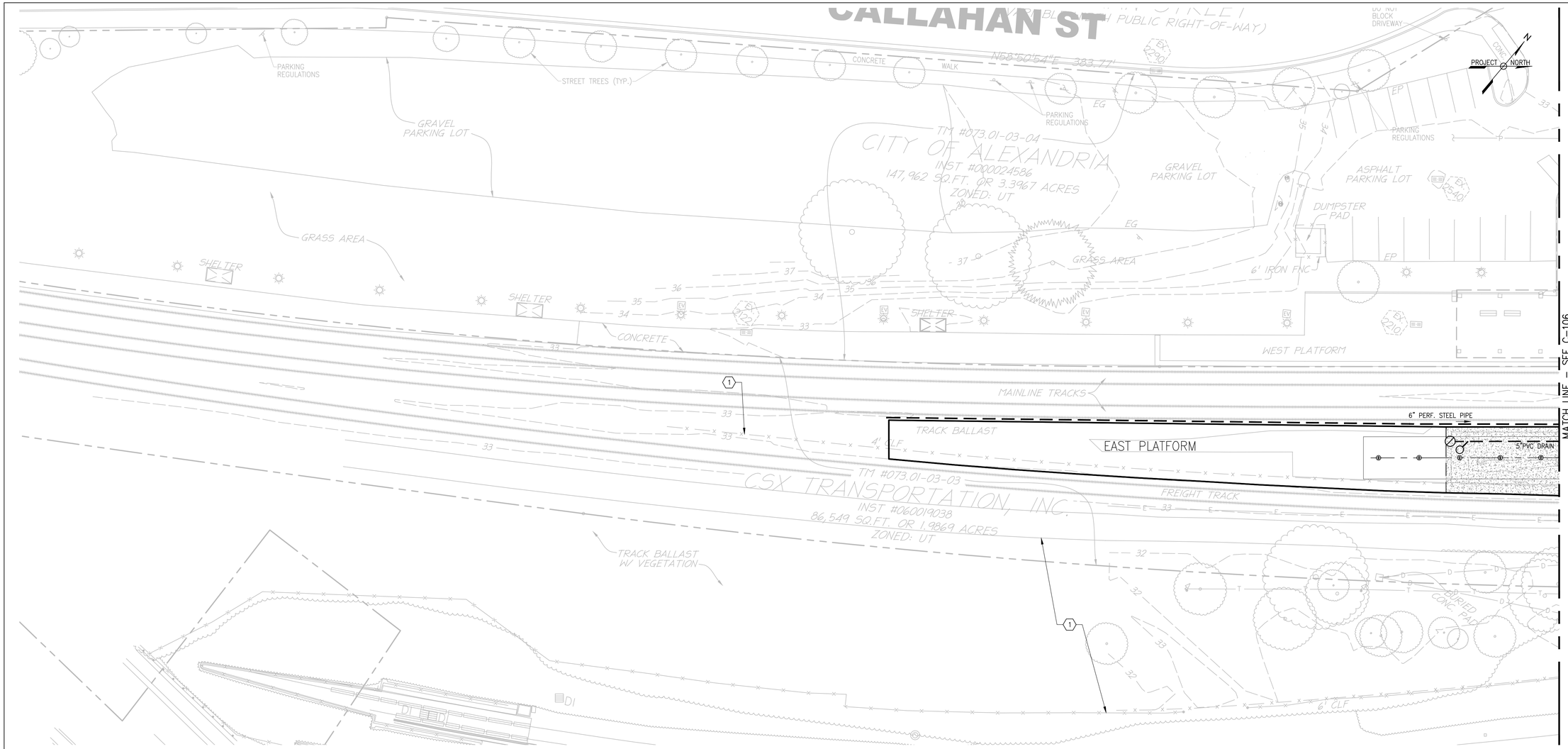

CONSTRUCTION NOTES

1. RESTORE SURFACE TO EXISTING GRADE. STABILIZE WITH 12" BALLAST.

GENERAL NOTES

1. CALL ALEXANDRIA ARCHAEOLOGY IF ARTIFACTS OR OLD STRUCTURAL REMAINS ARE UNCOVERED. NO METAL DETECTING, OTHER THAN UTILITY LOCATING, ALLOWED DURING THE PROJECT.
2. ALLOW NO METAL DETECTING ON THE PROPERTY WITHOUT AUTHORIZATION OF ALEXANDRIA ARCHAEOLOGY.

20 0 20 40
SCALE IN FEET

DATUM:
(H2) NAD 83
(VT) NAVD 88

APPROVED
SPECIAL USE PERMIT NO.
DEPARTMENT OF PLANNING & ZONING
DIRECTOR DATE
DEPARTMENT OF TRANSPORTATION & ENVIRONMENTAL SERVICES
SITE PLAN NO. DSP2011-0027
DIRECTOR DATE
CHAIRMAN, PLANNING COMMISSION DATE
DATE RECORDED
INSTRUMENT NO. DEED BOOK NO. PAGE NO.

60% SUBMITTAL

CONTRACT NO:	
PROJECT NO:	DATE:
DESIGNED:	
DRAFTED:	
CHECKED:	
APPROVED:	

REVISIONS

BY	NO	DATE	DESCRIPTION
GF	001		DEV. CONCEPT PLAN (30%)
GF	002	6/20/16	DEV. SITE PLAN

Gannett Fleming

COMMONWEALTH OF VIRGINIA
MARTHA JEAN AVERSO
Lic. No. 17470
PROFESSIONAL ENGINEER
6-20-16

VRE

VIRGINIA RAILWAY EXPRESS

ALEXANDRIA
PEDESTRIAN TUNNEL

DISCIPLINE:
CIVIL
GRADING AND DRAINAGE PLAN 2

SCALE: 1"=20'

DATE ISSUED: 6/20/16

DRAWING NO: C-107

LIST NO:

C:\pwworking\gfpw01\smello\d0593522\DSP-58349 C-106D.dwg, 6/21/2016 8:33:55 AM, smello

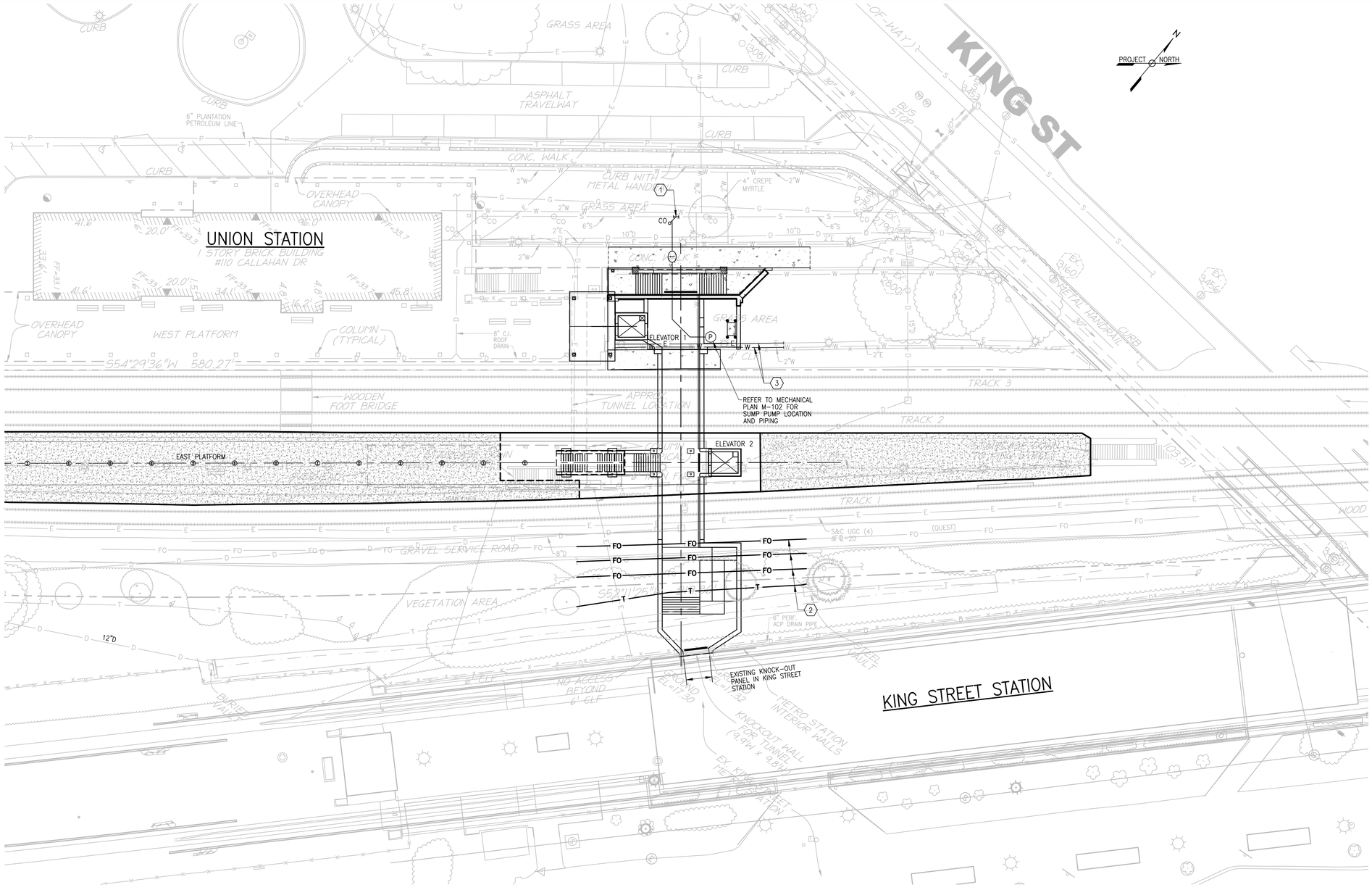

CONSTRUCTION NOTES

1. 6"X2" PVC WYE BRANCH WITH FLEXIBLE COUPLING CONNECTIONS TO EXISTING SANITARY SEWER.
2. EXISTING UNDERGROUND COMMUNICATION FACILITIES WILL BE RELOCATED VERTICALLY PRIOR TO INITIATION OF EXCAVATION BY UTILITY OWNER. CONTRACTOR TO COORDINATE WITH UTILITY OWNER CONTRACTORS FOR PERFORMANCE OF WORK.
3. EXISTING WATER AND STREET LIGHTING ELECTRIC SERVICE TO BE RECONSTRUCTED AFTER TUNNEL CONSTRUCTION AND PRIOR TO COMPLETETION OF BACKFILL OPERATIONS.

PIPE SCHEDULE

IDENT.	SIZE	MATERIAL	CLASS	FUNCTION
1	2	PVC	SDR25	SUMP PUMP DISCHARGE
–	–	–	–	–
–	–	–	–	–

APPROVED
SPECIAL USE PERMIT NO.
DEPARTMENT OF PLANNING & ZONING

DIRECTOR DATE

DEPARTMENT OF TRANSPORTATION & ENVIRONMENTAL SERVICES
SITE PLAN NO. DSP2011-0027

DIRECTOR DATE

CHAIRMAN, PLANNING COMMISSION DATE

DATE RECORDED

INSTRUMENT NO. DEED BOOK NO. PAGE NO.

20 0 20 40
SCALE IN FEET

DATUM:
(HZ) NAD 83
(VT) NAVD 88

60% SUBMITTAL

CONTRACT NO:	
PROJECT NO:	
	DATE:
DESIGNED:	
DRAFTED:	
CHECKED:	
APPROVED:	

REVISIONS

BY	NO	DATE	DESCRIPTION
GF	001		DEV. CONCEPT PLAN (30%)
GF	002	6/20/16	DEV. SITE PLAN

Gannett Fleming

COMMONWEALTH OF VIRGINIA
MARTHA JEAN AVERSO
Lic. No. 17470
PROFESSIONAL ENGINEER
6-20-16

VRE

VIRGINIA RAILWAY EXPRESS

ALEXANDRIA
PEDESTRIAN TUNNEL

DISCIPLINE:
CIVIL
UTILITY PLAN

DRAWING NO:
C-108

LIST NO:

SCALE: 1"=20'

DATE ISSUED: 6/20/16

C:\pwworking\gfpw01\smello\d0593522\DSP-58349 C-108(TL.dwg, 6/21/2016 8:36:21 AM, smello

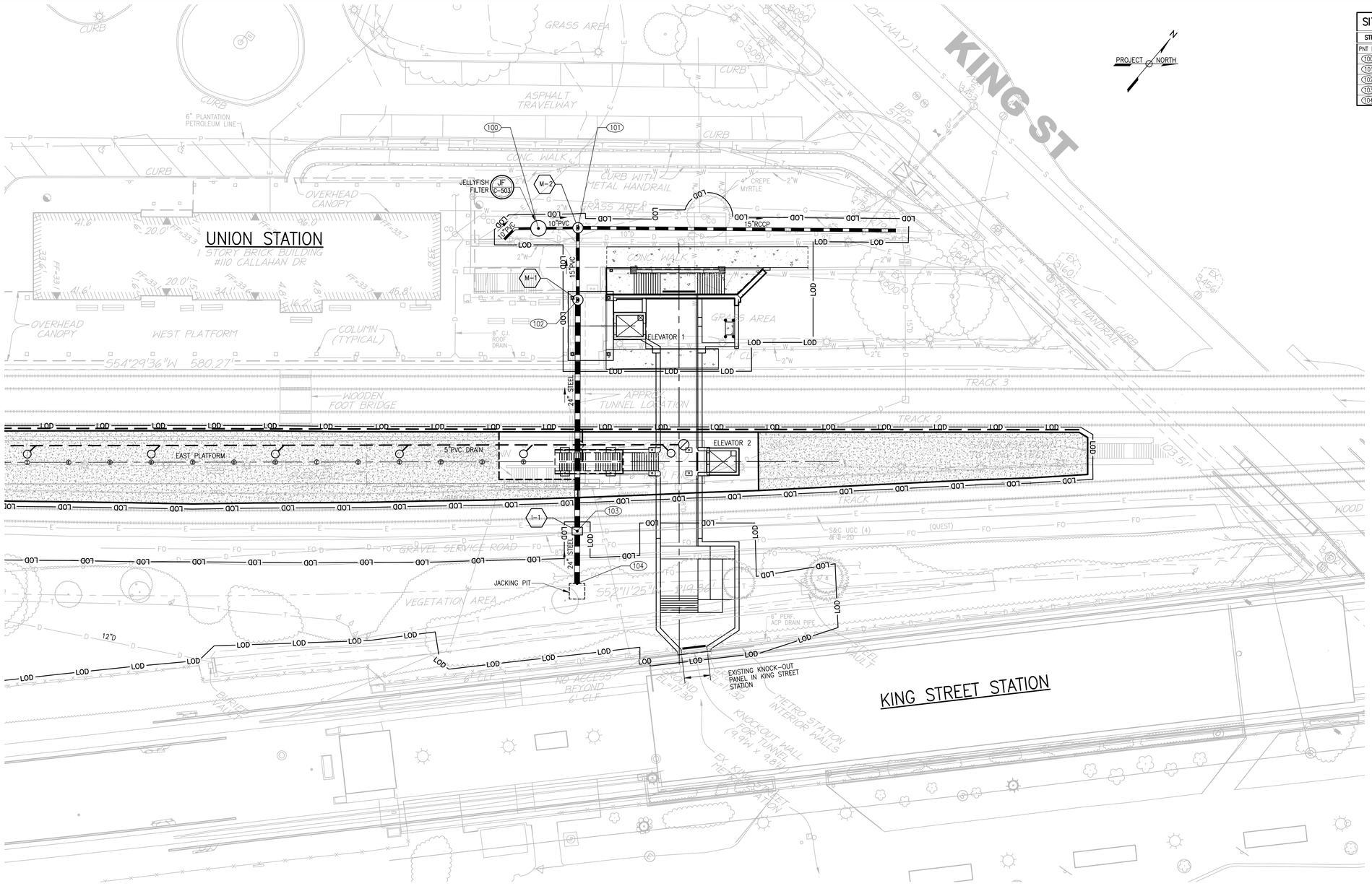

SITE STAKEOUT

STRUCTURES

PNT NO	NORTH	EAST	DESCRIPTION
100	N 6980009.8853	E 11892679.2881	JELLYFISH FILTER
101	N 6980018.9142	E 11892691.5949	DRAINAGE MANHOLE M-2
102	N 6979996.1774	E 11892707.7576	DRAINAGE MANHOLE M-1
103	N 6979923.1676	E 11892759.5314	INLET I-1
104	N 6979906.6033	E 11892771.2777	24" RCP

APPROVED
SPECIAL USE PERMIT NO.
DEPARTMENT OF PLANNING & ZONING

DIRECTOR DATE

DEPARTMENT OF TRANSPORTATION & ENVIRONMENTAL SERVICES
SITE PLAN NO. DSP2011-0027

DIRECTOR DATE

CHAIRMAN, PLANNING COMMISSION DATE

DATE RECORDED

INSTRUMENT NO. DEED BOOK NO. PAGE NO.

20 0 20 40
SCALE IN FEET

DATUM:
(HZ) NAD 83
(VT) NAVD 88

60% SUBMITTAL

CONTRACT NO:	
PROJECT NO:	
	DATE:
DESIGNED:	
DRAFTED:	
CHECKED:	
APPROVED:	

REVISIONS

BY	NO	DATE	DESCRIPTION
GF	001		DEV. CONCEPT PLAN (30%)
GF	002	6/20/16	DEV. SITE PLAN

Gannett Fleming

COMMONWEALTH OF VIRGINIA
MARTHA JEAN AVERSO
Lic. No. 17470
PROFESSIONAL ENGINEER
6-20-16

VRE

VIRGINIA RAILWAY EXPRESS

ALEXANDRIA
PEDESTRIAN TUNNEL

DISCIPLINE:
CIVIL
STAKEOUT PLAN

SCALE: 1"=20'

DATE ISSUED: 6/20/16

DRAWING NO: C-109

LIST NO:

C:\pwworking\gfpw01\smellis\d0593522\DSP-58349 C-109SOP.dwg, 6/21/2016 8:40:37 AM, smellis

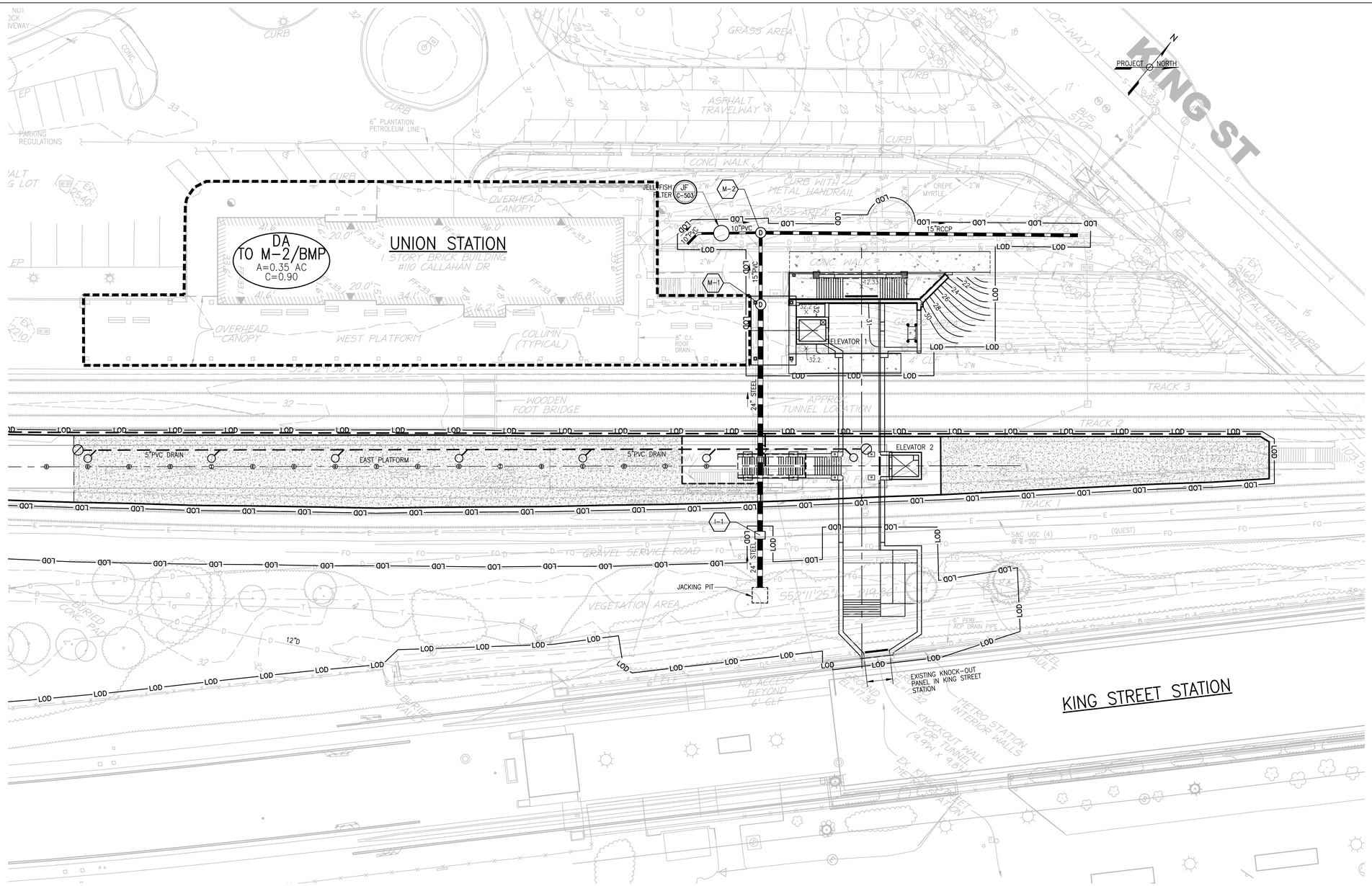

STORMWATER MANAGEMENT PLAN NOTES:

1. IN COMPLIANCE WITH ARTICLE XIII OF THE ZONING ORDINANCE, A REQUEST TO WAIVE THE STORMWATER QUANTITY REQUIREMENT IS PRESENTED ON SHEET C-111.
2. SHEET C-111 PROVIDES DETAILS FOR THE WATER QUALITY ASSESSMENT AND EXHIBIT, AND SHEET C-120 PRESENTS VRRM WORKSHEETS.
3. DUE TO SITE CONSTRAINTS, THE PROPOSED BMP IS UNABLE TO COLLECT AND TREAT ON-SITE IMPERVIOUS AREA. TO OFFSET, A GREATER AMOUNT OF OFF-SITE IMPERVIOUS AREA IS UTILIZED TO TREAT AND THUS MEET BEYOND THE WATER QUALITY REQUIREMENTS. THE TARGET REDUCTION IS EXCEEDED BY 0.4 LB/YEAR.
4. WATER QUALITY FOR THE ENTIRE PROJECT SITE IS PROVIDED BY ONE MANUFACTURED BMP – JELLYFISH FILTER.

BMP SYSTEM JELLYFISH FILTER NOTES:

1. THE STORMWATER QUALITY TREATMENT SHALL BE PROVIDED UTILIZING THE VIRGINIA DEPARTMENT OF ENVIRONMENTAL QUALITY (VA DEQ) AND THE CITY OF ALEXANDRIA APPROVED MANUFACTURED BMP SYSTEM JELLYFISH FILTER. THE JELLYFISH FILTER IS A STORMWATER QUALITY TREATMENT TECHNOLOGY IS A HIGH FLOW PRETREATMENT AND MEMBRANE FILTRATION IN A COMPACT STAND-ALONE SYSTEM. JELLYFISH REMOVES FLOATABLES, TRASH, OIL, DEBRIS, TSS, FINE SILT-SIZED PARTICLES, AND A HIGH PERCENTAGE OF PARTICULATE-BOUND POLLUTANTS; INCLUDING PHOSPHORUS, NITROGEN, METALS, AND HYDROCARBONS. THE BMP STRUCTURAL DETAILS, INSTALLATION NOTES, AND GENERAL NOTES ARE PROVIDED ON SHEET C-503.
2. THE STORMWATER BEST MANAGEMENT PRACTICE (BMP) REQUIRED FOR THIS PROJECT SHALL BE CONSTRUCTED AND INSTALLED UNDER THE DIRECT SUPERVISION OF THE DESIGN ENGINEER OR HIS DESIGNATED REPRESENTATIVE. THE DESIGN ENGINEER SHALL MAKE A WRITTEN CERTIFICATION TO THE CITY THAT THE BMP IS CONSTRUCTED AND INSTALLED AS DESIGNED AND IN ACCORDANCE WITH THE APPROVED SITE PLAN. IN ADDITION, AGGREGATE LAYERS AND COLLECTOR PIPES MAY NOT BE INSTALLED UNLESS THE DESIGN ENGINEER OR HIS REPRESENTATIVE IS PRESENT.
3. THE CONTRACTOR SHALL FURNISH THE CITY WITH AN OPERATION AND MAINTENANCE MANUAL FOR THE PROPOSED BMP ON THE PROJECT. THE MANUAL SHALL INCLUDE AN EXPLANATION OF THE FUNCTIONS AND OPERATIONS OF THE BMP AND ANY SUPPORTING UTILITIES, CATALOGUE CUTS ON ANY MECHANICAL OR ELECTRICAL EQUIPMENT AND A SCHEDULE OF ROUTINE MAINTENANCE FOR THE BMP AND SUPPORTING EQUIPMENT.

PROPOSED STORM DRAIN SYSTEM NOTES:

1. COMPUTATION OF PEAK RUNOFF RATE: THE POST DEVELOPMENT PEAK RATE OF RUNOFF IS COMPUTED BY THE RATIONAL METHOD IN ACCORDANCE WITH THE VDOT HYDRAULIC DESIGN ADVISORY HDA 05-03. THE "ATLAS 14" RAINFALL PRECIPITATION FREQUENCY DATA, PUBLISHED B, D, & E FACTORS AVAILABLE FOR NEAREST LOCATION TO THE PROJECT SITE ARE CHOSEN, AND EMPLOYED FOR RECURRENCE INTERVAL STORM DURATIONS.
2. IN COMPLIANCE WITH CSX DESIGN REQUIREMENT: THE PROPOSED STORM SEWER SYSTEM, FROM STRUCTURE I-1 TO EXISTING 2790, IS PARTIALLY LOCATED IN CSX PROPERTY. THE SYSTEM CAPACITY IS SUFFICIENTLY DESIGNED FOR 100 YEAR STORM INCIDENCE PROBABILITY AND THUS MEET CSX DESIGN REQUIREMENT.
3. STORM SEWER COMPUTATIONS: THE VDOT STORM-SEWER WORKSHEET, LD-229, IS EMPLOYED TO COMPUTE THE PROPOSED STORM DRAINAGE SYSTEM. AN INLET TIME OF CONCENTRATION OF 5 MINUTES IS USED FOR THIS ULTRA-URBAN ENVIRONMENT SETTING. ALL HYDROLOGIC ANALYSES RELATE TO PRE AND POST DEVELOPMENT ARE BASED ON THE EXISTING WATERSHED CHARACTERISTICS AND THE ULTIMATE DEVELOPMENT OF THE PROJECT.
4. CIVIL DRAINAGE AREA MAP, SHEET C-112, DEMONSTRATES THE DRAINAGE DIVIDE AREAS TO EACH STRUCTURES OF THE SYSTEM.

APPROVED
SPECIAL USE PERMIT NO.
DEPARTMENT OF PLANNING & ZONING

DIRECTOR DATE

DEPARTMENT OF TRANSPORTATION & ENVIRONMENTAL SERVICES
SITE PLAN NO. DSP2011-0027

DIRECTOR DATE

CHAIRMAN, PLANNING COMMISSION DATE

DATE RECORDED

INSTRUMENT NO. DEED BOOK NO. PAGE NO.

20 0 20 40
SCALE IN FEET

DATUM:
(HZ) NAD 83
(VT) NAVD 88

60% SUBMITTAL

CONTRACT NO:		REVISIONS			
PROJECT NO:		BY	NO	DATE	DESCRIPTION
	DATE:	GF	001		DEV. CONCEPT PLAN (30%)
DESIGNED:		GF	002	6/20/16	DEV. SITE PLAN
DRAFTED:					
CHECKED:					
APPROVED:					

Gannett Fleming

COMMONWEALTH OF VIRGINIA
MARTHA JEAN AVERSO
Lic. No. 17470
PROFESSIONAL ENGINEER
6-20-16

VRE

VIRGINIA RAILWAY EXPRESS

ALEXANDRIA
PEDESTRIAN TUNNEL

DISCIPLINE:
CIVIL
STORMWATER MANAGEMENT PLAN

DRAWING NO:
C-110

LIST NO:

SCALE: 1"=20'

DATE ISSUED: 6/20/16

C:\pwworking\gfpw01\smello\d0593522\DSP-58349 C-110SWM.dwg, 6/21/2016 8:43:33 AM, smello

WATER QUALITY NARRATIVE

THE PROJECT INVOLVES CONSTRUCTION OF A NEW PEDESTRIAN TUNNEL LINKING THE VRE UNION STATION (110 CALLAHAN DRIVE) WITH THE WMATA KING STREET STATION (1900 KING STREET) IN ALEXANDRIA, VA. ADDITIONAL WORK INVOLVES 2 FOOT WIDENING OF 150 LINEAR FEET OF THE EXISTING EAST PLATFORM. FURTHER, THE EXISTING PLATFORM CANOPY WILL BE EXPANDED BY 300 LINEAR FEET.

THIS PROJECT IS A LINEAR PROJECT AND IT OUTFALLS TO HOOFF'S RUN. THE PROJECT WILL HAVE A NEGLIGIBLE IMPACT ON THE POTOMAC RIVER WATERSHED. THE PROJECT IS CONSIDERED RE-DEVELOPMENT AND IT WILL MINIMIZE ADVERSE IMPACTS ON WATER QUALITY AND DISCHARGE TO THE POTOMAC RIVER. THE RUNOFF REDUCTION METHOD REDEVELOPMENT SUMMARY WORKSHEET IS USED TO PERFORM THE WATER QUALITY ASSESSMENT, INCLUDED ON SHEET C-120. THE STORMWATER MANAGEMENT WATER QUALITY TREATMENT REQUIREMENT SHALL BE ACHIEVED ENTIRELY BY UTILIZING ONE (1) 6 FOOT DIAMETER JELLYFISH FILTER UNIT. THIS STRUCTURE IS TO PROVIDE UP TO 50% EFFICIENCY (AS PER THE CITY OF ALEXANDRIA GUIDANCE) IN REMOVING POLLUTANTS FROM THE STORMWATER RUNOFF. THE PROPOSED BMP STRUCTURE SHALL BE INSTALLED AND CONNECTED TO THE EXISTING CLOSED CONDUIT STORM SEWER SYSTEM. A BIANNUAL MAINTENANCE WILL INCLUDE REMOVING TRASH AND DEBRIS AND REPLACING THE MULCH INSIDE THE STRUCTURE.

AS PRESENTED ON SHEET C-120, THE TOTAL SITE (PROJECT) AREA IS 0.27 ACRES. THE TOTAL IMPERVIOUS AREAS IN PRE-DEVELOPMENT AND POST-DEVELOPMENT CONDITIONS ARE 0.13 ACRE AND 0.18 ACRE, RESPECTIVELY. THE VIRGINIA RUNOFF REDUCTION METHOD RE-DEVELOPMENT WORKSHEET IS EMPLOYED FOR THE WATER QUALITY ASSESSMENT AND COMPLIANCE CALCULATION. THE MANUFACTURED BMP JELLYFISH FILTER, WITH AN EFFICIENCY OF 50%, IS UTILIZED TO REDUCE THE POST-DEVELOPMENT LOAD. THE TOTAL PHOSPHORUS LOAD REDUCTION ACHIEVED (0.38 LB/YR) IS GREATER THAN THE TOTAL PHOSPHORUS LOAD REDUCTION REQUIRED (0.12 LB/YR). THUS, THE TARGET REDUCTION IS EXCEEDED BY 0.26 LB/YR. SEE SHEETS C-110 FOR STORMWATER MANAGEMENT PLAN AND C-503 FOR STORMWATER MANAGEMENT DETAILS.

VARIANCE REQUEST FOR RUNOFF REDUCTION VOLUME REQUIREMENT,19 MINIMUM STANDARDS AND DISCHARGING TO A COMBINED SEWER SYSTEM

THE PROPOSED CONSTRUCTION IS LINEAR REDEVELOPMENT AND REPAIR WORK FOR THE VIRGINIA RAILWAY EXPRESS (VRE) WITH A TOTAL DISTURBANCE ESTIMATED UNDER 10,000 SQUARE FEET. NO MORE LAND SHALL BE DISTURBED THAN IS NECESSARY TO PROVIDE THE CONSTRUCTION OF A TUNNEL AND MINOR EXPANSION OF EXISTING PLATFORM. THE ENTIRE PROJECT IS LOCATED OUTSIDE THE 100 FOOT RESOURCE PROTECTION AREA (RPA) BUFFER AND 50 FEET OUTSIDE THE TOP OF STREAM BANK FOR NATURAL INTERMITTENT STREAMS. THE PROJECT MEETS THE CITY CODE 13-123-EXEMPTIONS REQUIREMENT. THEREFORE, IT IS REQUESTED TO WAIVE THE RUNOFF REDUCTION TREATMENT VOLUME (702 CUBIC FEET) REQUIREMENT, 19 MINIMUM STANDARDS REQUIREMENTS ADEQUATE OUTFALL ANALYSIS, AND ALLOW TO DISCHARGE TO A COMBINED SEWER SYSTEM. AN ESC PLAN WILL BE DEVELOPED TO EXPLAIN AND ILLUSTRATE THE CONTROL MEASURES TO BE USED DURING PROJECT CONSTRUCTION THAT MEETS THE INTENTS OF THE APPROPRIATE MINIMUM STANDARDS AS PRESENTED ON SHEET C-505.

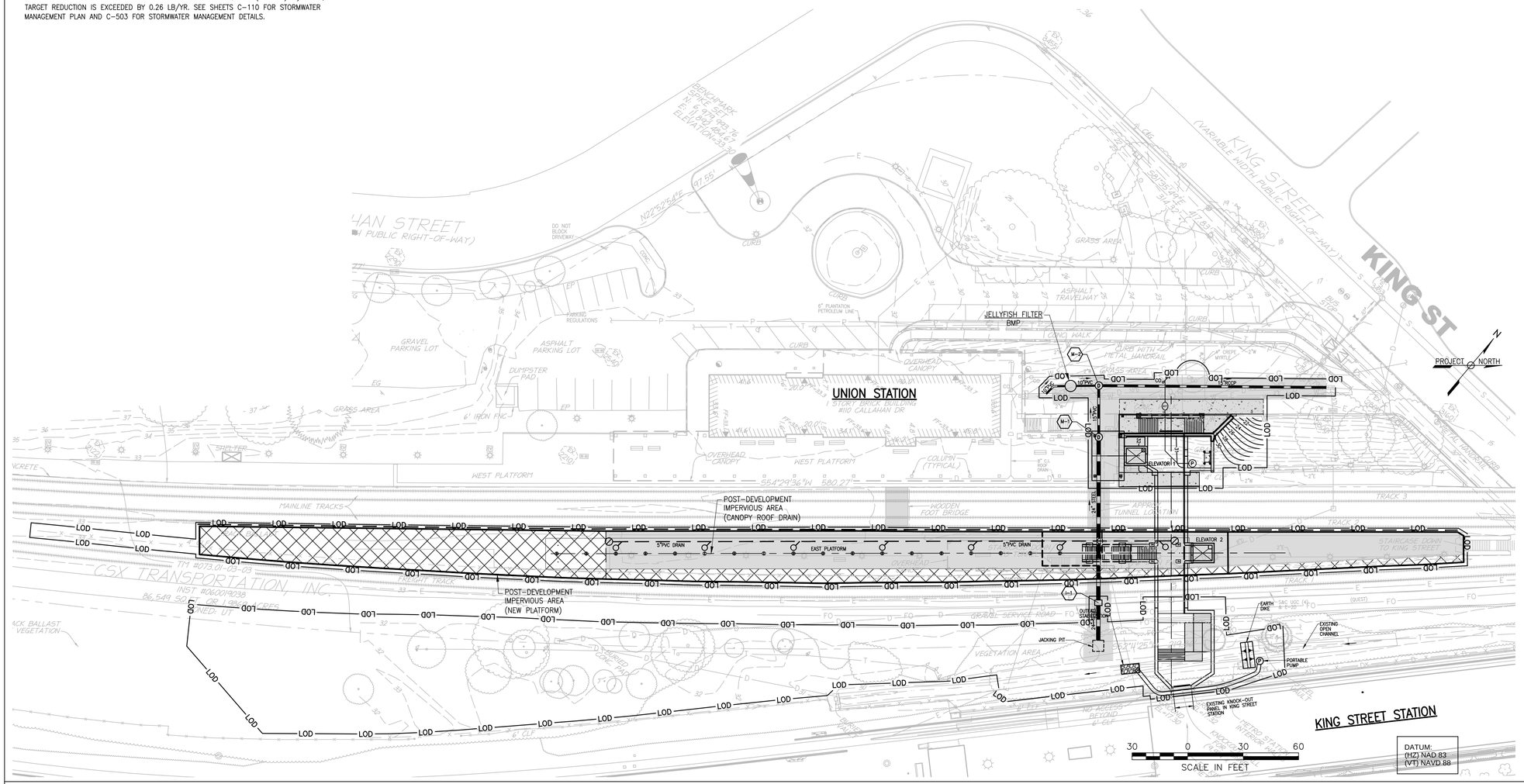

PRE-DEVELOPMENT LAND COVER

LAND COVER TYPE	D SOILS AREA
FOREST/OPEN SPACE	NONE
MANAGED TURF	0.12 AC.
IMPERVIOUS COVER	0.13 AC.

POST-DEVELOPMENT LAND COVER

LAND COVER TYPE	D SOILS AREA
FOREST/OPEN SPACE	NONE
MANAGED TURF	0.09 AC.
IMPERVIOUS COVER	0.18 AC.

LEGEND

PRE-DEVELOPMENT AREA

POST-DEVELOPMENT AREA

LOD — SITE AREA

APPROVED
SPECIAL USE PERMIT NO.
DEPARTMENT OF PLANNING & ZONING

DIRECTOR DATE

DEPARTMENT OF TRANSPORTATION & ENVIRONMENTAL SERVICES
SITE PLAN NO. DSP2011-0027

DIRECTOR DATE

CHAIRMAN, PLANNING COMMISSION DATE

DATE RECORDED

INSTRUMENT NO. DEED BOOK NO. PAGE NO.

60% SUBMITTAL

CONTRACT NO:		REVISIONS			
PROJECT NO:		BY	NO	DATE	DESCRIPTION
	DATE:	GF	001		DEV. CONCEPT PLAN (30%)
DESIGNED:		GF	002	6/20/16	DEV. SITE PLAN
DRAFTED:					
CHECKED:					
APPROVED:					

Gannett Fleming

COMMONWEALTH OF VIRGINIA
MARTHA JEAN AVERSO
Lic. No. 17470
PROFESSIONAL ENGINEER
6-20-16

VRE

VIRGINIA RAILWAY EXPRESS

ALEXANDRIA
PEDESTRIAN TUNNEL

DISCIPLINE:
CIVIL
WATER QUALITY
ASSESSMENT SHEET

SCALE: 1"=30'

DATE ISSUED: 6/20/16

DRAWING NO: C-111

LIST NO:

C:\pwworking\gfpw01\smeilo\d0593522\DSP-58349 C-111WQA.dwg, 6/21/2016 8:46:12 AM, smeilo

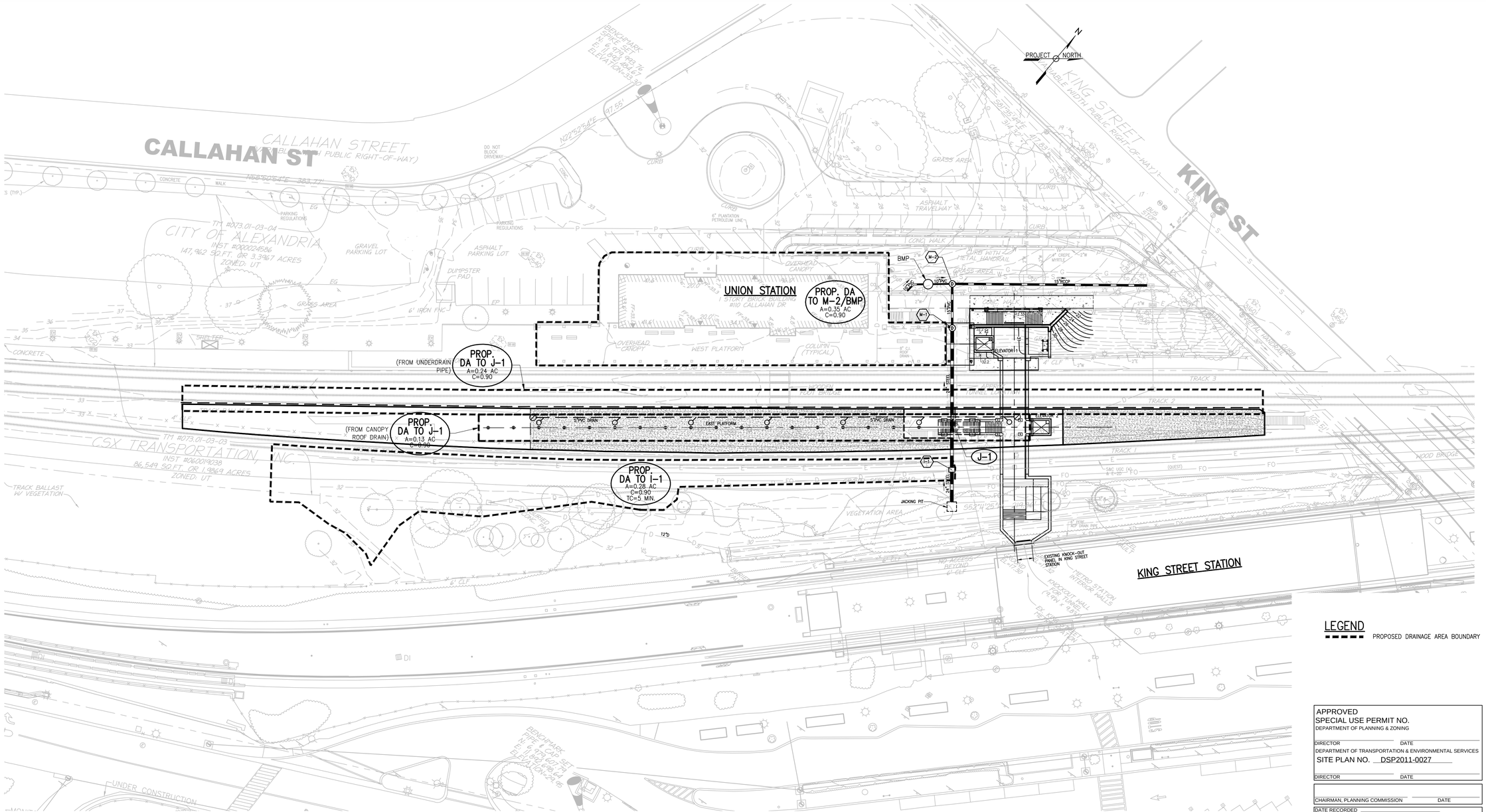
PROJECT NORTH
CALLAHAN ST
CALLAHAN STREET
KING ST
KING STREET
CITY OF ALEXANDRIA
CSX TRANSPORTATION, INC.
UNION STATION
1 STORY BRICK BUILDING
#110 CALLAHAN DR
PROP. DA TO M-2/BMP
A=0.35 AC
C=0.90
BMP
PROP. DA TO J-1
(FROM UNDERDRAIN PIPE)
A=0.24 AC
C=0.90
PROP. DA TO J-1
(FROM CANOPY ROOF DRAIN)
A=0.13 AC
C=0.90
PROP. DA TO I-1
A=0.28 AC
C=0.90
TC=5 MIN.
J-1
JACKING PIT
EXISTING KNOCK-OUT PANEL IN KING STREET STATION
KING STREET STATION
WEST PLATFORM
EAST PLATFORM
OVERHEAD CANOPY
ELEVATOR 1
VEGETATION AREA
TRACK BALLAST W/ VEGETATION
UNDER CONSTRUCTION
GRAVEL PARKING LOT
ASPHALT PARKING LOT
GRASS AREA
ASPHALT TRAVELWAY
DUMPSTER PAD
6' IRON FNC
SHELTER
CONCRETE
WALK
CURB
BENCHMARK TIPS & CAPS SET
N: 6,473,607.24
E: 2,403,198.46
ELEVATION=24.95
BENCHMARK TIPS & CAPS SET
N: 6,473,993.76
E: 2,403,484.67
ELEVATION=33.39
N22°53'54"E 37.55'
S22°53'54"W 41.85'
N68°50'54"E 383.77'
S68°50'54"W 41.85'
S55°24'25"E
N22°53'54"E
S22°53'54"E
S22°53'54"W
S68°50'54"W
S68°50'54"E
S55°24'25"W

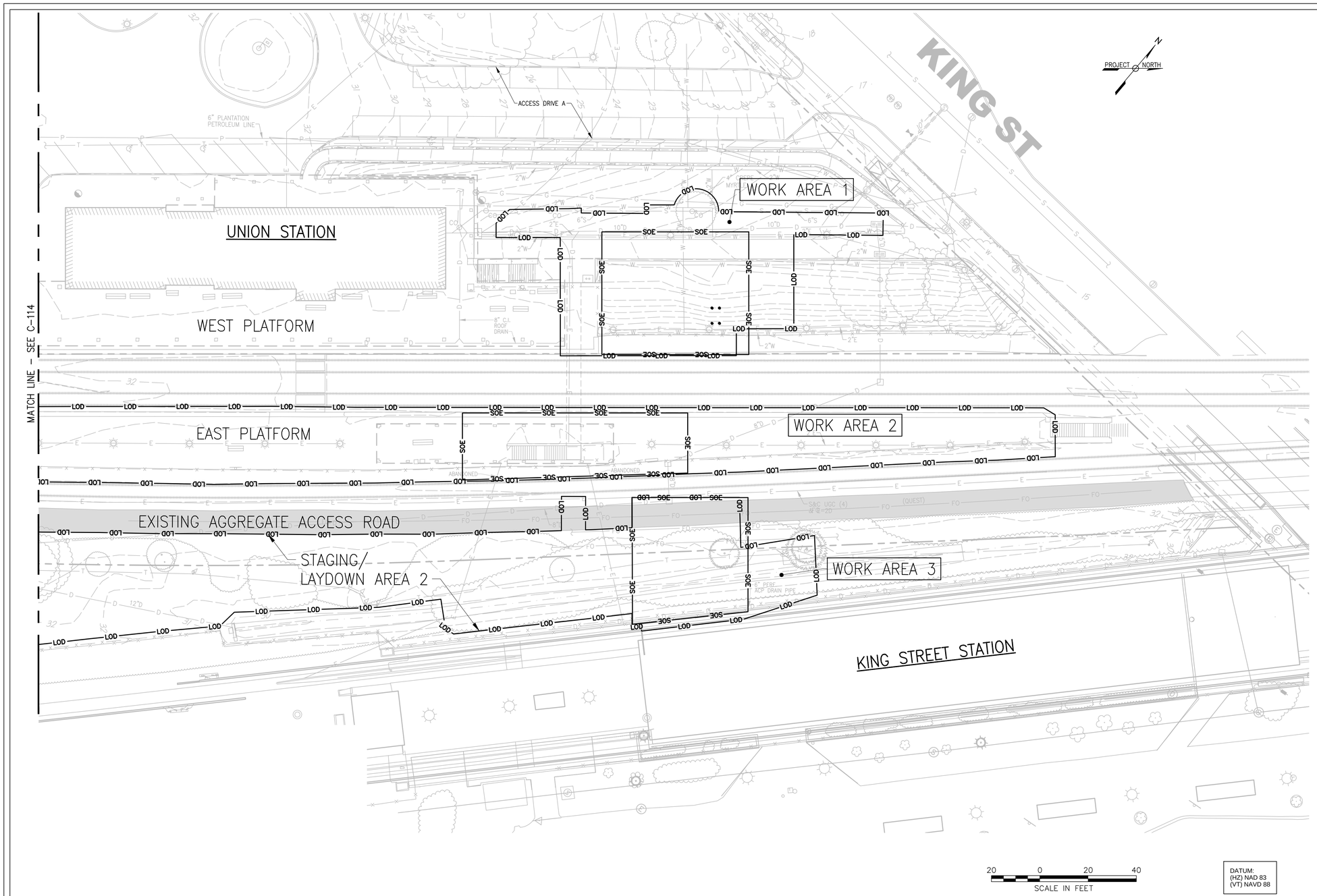

CONSTRUCTION ACCESS/ STAGING NOTES

GENERAL

1. SAFETY IS PARAMOUNT THROUGHOUT THE CONSTRUCTION PERIOD. SAFETY REQUIREMENTS WILL BE STRICTLY ENFORCED.
2. UNION STATION, KING STREET STATION AND THE CSX RAILWAY IN THE WORK AREA SHALL REMAIN IN CONTINUOUS UNINTERRUPTED OPERATION THROUGHOUT THE CONSTRUCTION PERIOD.
3. THE CONTRACTOR SHALL COORDINATE ALL PLANNED CONSTRUCTION OPERATIONS WITH THE VRE PROJECT MANAGER TO MINIMIZE IMPACTS TO FACILITY OPERATION.
4. RESTRICTION OF OPERATIONS MAY BE REQUIRED DURING PEAK TRAVEL PERIODS, FOR PERFORMANCE OF FACILITY MAINTENANCE OR OTHER REASONS. THE VRE PROJECT MANAGER WILL COMMUNICATE THE NEED FOR ANY MODIFICATION OF CONSTRUCTION OPERATIONS TO THE CONTRACTOR.
5. SEE THE MAINTENANCE OF TRAFFIC PLAN FOR PEDESTRIAN AND VEHICULAR TRAFFIC ROUTING DURING THE CONSTRUCTION PERIOD.

WORK AREA 1

1. WORK AREA 1 SHALL BE ACCESSED FROM KING STREET AND ACCESS DRIVE A.
2. ACCESS TO THE WORK AREA SHALL BE RESTRICTED TO CONTRACTOR PERSONNEL ONLY BY A COMBINATION OF VEHICULAR AND PEDESTRIAN BARRICADES AND ORANGE SAFETY FENCE SURROUNDING ALL ACTIVE WORK AREAS.
3. STAGING/LAYDOWN AREA 1 IS AVAILABLE FOR CONTRACTOR USE FOR THE CONSTRUCTION OFFICE, PARKING AND LAYDOWN. IF ADDITIONAL AREA IS REQUIRED THE CONTRACTOR SHALL SECURE SUCH AREAS OFFSITE.
4. MATERIAL DELIVERIES TO THE STAGING AREA AND MATERIAL TRANSFER BETWEEN THE STAGING AREA AND THE TUNNEL PORTAL EXCAVATION AREA SHALL BE LIMITED TO OFF PEAK TRAVEL HOURS.

WORK AREA 2

1. WORK AREA 2 PERSONNEL ACCESS SHALL BE FROM THE WEST PLATFORM OR EXISTING TUNNEL.
2. EQUIPMENT ACCESS SHALL BE VIA THE CSX AGGREGATE ACCESS ROAD.
3. CONSTRUCTION EQUIPMENT SHALL BE LIFTED AND PLACED ON THE EAST PLATFORM FROM WORK AREA 3.
4. NO EQUIPMENT CAN CROSS TRACK AREAS WITHOUT PRIOR APPROVAL FROM THE VRE PROJECT MANAGER AND CSX.

WORK AREA 3

1. WORK AREA 3 SHALL BE ACCESSED USING THE EXISTING CSX AGGREGATE PAVED ACCESS ROAD.
2. THE EXISTING ACCESS ROAD SHALL BE ENTERED FROM AN EXISTING ACCESS POINT AT THE TERMINUS OF ROTH STREET. ACCESS ALONG AND THROUGH THE CSX TRACK AREA SHALL BE ALONG THE EXISTING ACCESS ROAD AS SHOWN ON THE PLANS.
3. STAGING/LAYDOWN AREA 2 IS AVAILABLE FOR CONTRACTOR USE FOR PARKING AND LAYDOWN. IF ADDITIONAL AREA IS REQUIRED THE CONTRACTOR SHALL SECURE SUCH AREAS OFFSITE.
4. MATERIAL DELIVERIES TO THE STAGING AREA SHALL BE LIMITED TO OFF PEAK TRAVEL HOURS AS ESTABLISHED BY CSX.
5. THE CONTRACTOR SHALL KEEP THE TRACK AND ACCESS ROAD CLEAR OF ALL MUD AND DEBRIS THROUGHOUT PERFORMANCE OF THE WORK.

APPROVED
SPECIAL USE PERMIT NO.
DEPARTMENT OF PLANNING & ZONING
DIRECTOR DATE
DEPARTMENT OF TRANSPORTATION & ENVIRONMENTAL SERVICES
SITE PLAN NO. DSP2011-0027
DIRECTOR DATE
CHAIRMAN, PLANNING COMMISSION DATE
DATE RECORDED
INSTRUMENT NO. DEED BOOK NO. PAGE NO.

20 0 20 40
SCALE IN FEET

DATUM:
(HZ) NAD 83
(VT) NAVD 88

60% SUBMITTAL

CONTRACT NO:		REVISIONS			
PROJECT NO:		BY	NO	DATE	DESCRIPTION
	DATE:	GF	001		DEV. CONCEPT PLAN (30%)
DESIGNED:		GF	002	6/20/16	DEV. SITE PLAN
DRAFTED:					
CHECKED:					
APPROVED:					

Gannett Fleming

COMMONWEALTH OF VIRGINIA
MARTHA JEAN AVERSO
Lic. No. 17470
PROFESSIONAL ENGINEER
6-20-16

VRE

VIRGINIA RAILWAY EXPRESS

ALEXANDRIA
PEDESTRIAN TUNNEL

DISCIPLINE:
CIVIL
CONSTRUCTION ACCESS PLAN 1

DRAWING NO:
C-113

LIST NO:

SCALE: 1"=20'

DATE ISSUED: 6/20/16

C:\pwworking\gfpw01\smello\d0593522\DSP-58349 C-113CAP.dwg, 6/21/2016 8:52:20 AM, smello

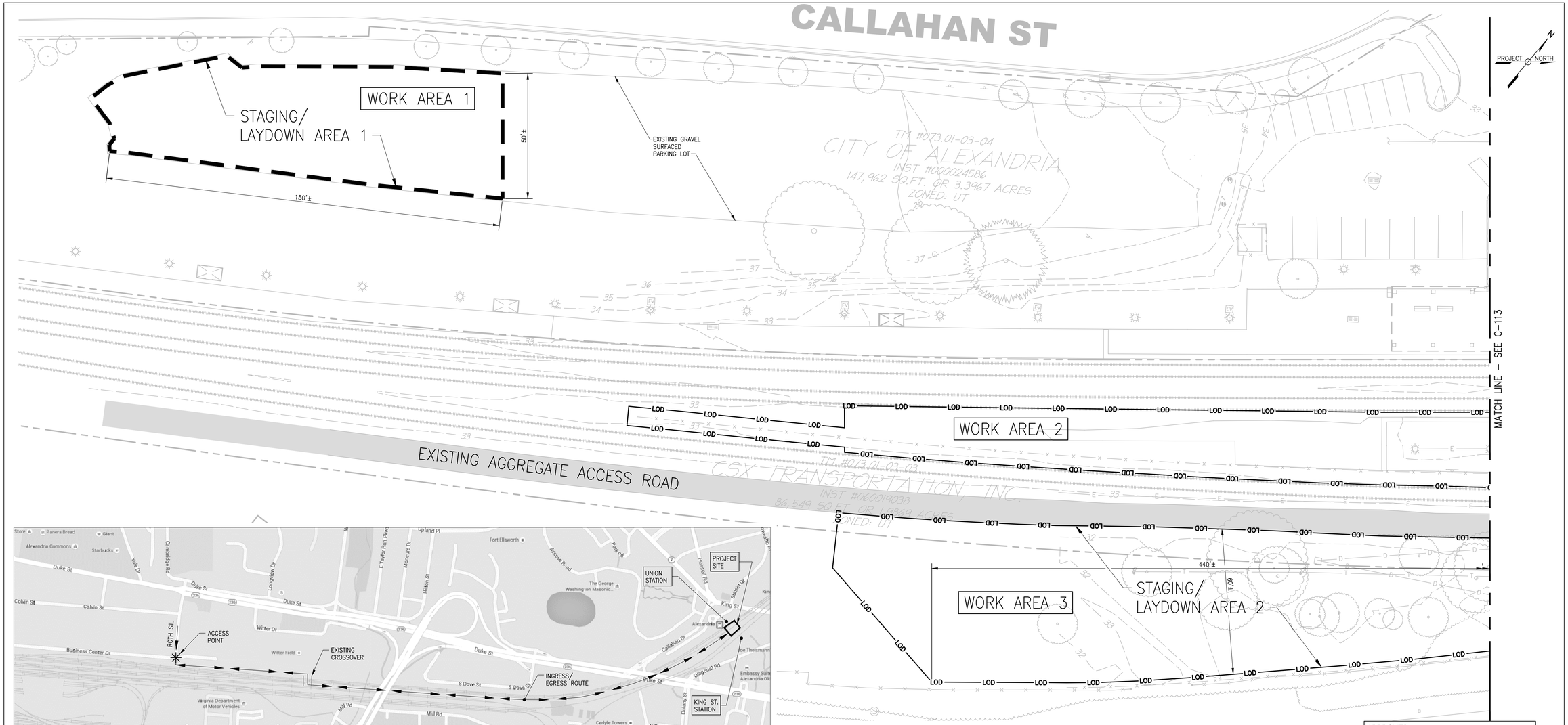

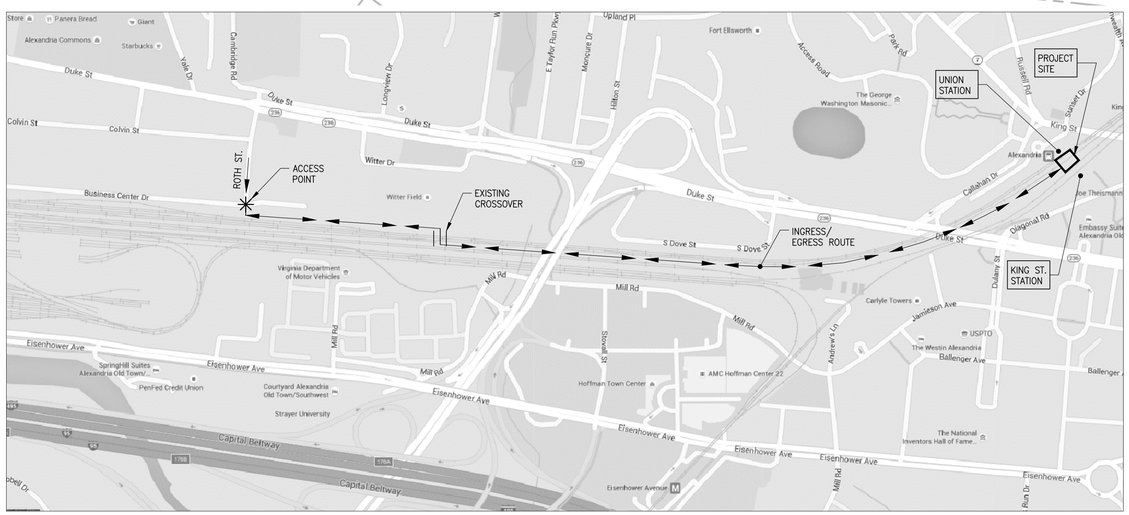

OVERALL CONSTRUCTION ACCESS PLAN

SCALE: 1"=500'

500 0 500 1000

SCALE IN FEET

LEGEND

INGRESS/EGRESS ROUTE ALONG EXISTING AGGREGATE SERVICE ROAD

20 0 20 40

SCALE IN FEET

DATUM:
(HZ) NAD 83
(VT) NAVD 88

APPROVED
SPECIAL USE PERMIT NO.
DEPARTMENT OF PLANNING & ZONING

DIRECTOR DATE
DEPARTMENT OF TRANSPORTATION & ENVIRONMENTAL SERVICES
SITE PLAN NO. DSP2011-0027

DIRECTOR DATE

CHAIRMAN, PLANNING COMMISSION DATE

DATE RECORDED

INSTRUMENT NO. DEED BOOK NO. PAGE NO.

60% SUBMITTAL

CONTRACT NO:		REVISIONS			
PROJECT NO:		BY	NO	DATE	DESCRIPTION
	DATE:	GF	001		DEV. CONCEPT PLAN (30%)
DESIGNED:		GF	002	6/20/16	DEV. SITE PLAN
DRAFTED:					
CHECKED:					
APPROVED:					

Gannett Fleming

COMMONWEALTH OF VIRGINIA
MARTHA JEAN AVERSO
Lic. No. 17470
PROFESSIONAL ENGINEER
6-20-16

VRE

VIRGINIA RAILWAY EXPRESS

ALEXANDRIA
PEDESTRIAN TUNNEL

DISCIPLINE:
CIVIL
CONSTRUCTION ACCESS PLAN 2

SCALE: 1"=20'

DATE ISSUED: 6/20/16

DRAWING NO: C-114

LIST NO:

C:\pwworking\gfpa01\smello\d0593522\DSP-58349 C-113C AP.dwg, 6/21/2016 8:52:54 AM, smello

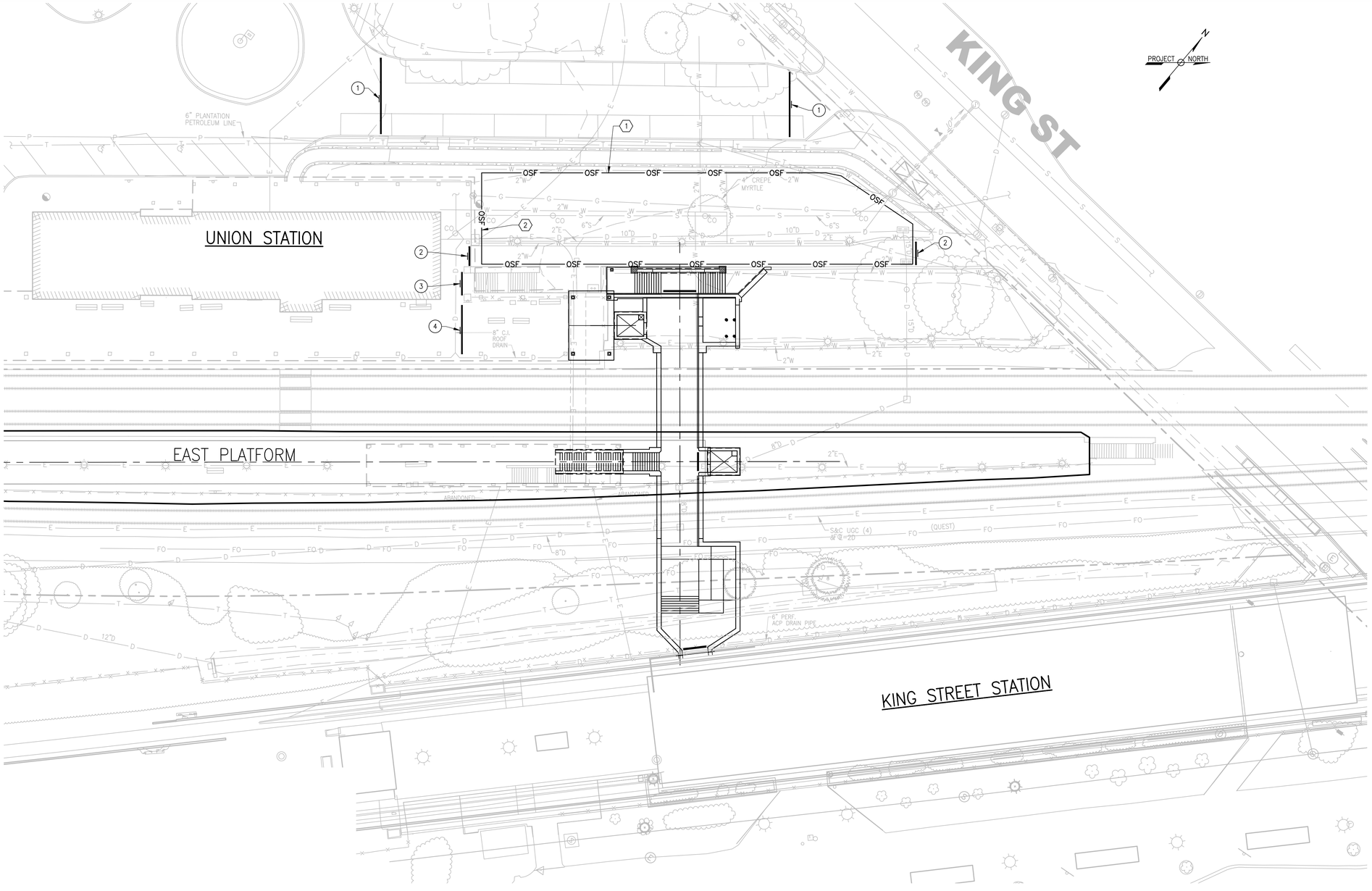

MAINTENANCE OF TRAFFIC NOTES

1. MAINTAIN PEDESTRIAN VEHICULAR TRAVEL WAYS OPEN DURING PEAK TRAVEL HOURS.
2. INSTALL ROAD AND SIDEWALK CLOSURES DURING PERIODS OF ACTIVE WORK.

NOTES

1. INSTALL ORANGE SAFETY FENCE (42" HEIGHT) ALONG PERIMETER OF LAWN AREA.
2. MAINTAIN ACCESS FOR VRE AND CITY OF ALEXANDRIA OPERATIONS PERSONNEL.

SIGN DETAILS

1. ROAD CLOSED — R11-2 (48"X 30")
2. SIDEWALK CLOSED — (24"X 36")
3. SIDEWALK/ STAIRS CLOSED — (24"X 36")
4. PLATFORM CLOSED — (24"X 36")

APPROVED
SPECIAL USE PERMIT NO.
DEPARTMENT OF PLANNING & ZONING
DIRECTOR DATE
DEPARTMENT OF TRANSPORTATION & ENVIRONMENTAL SERVICES
SITE PLAN NO. DSP2011-0027
DIRECTOR DATE
CHAIRMAN, PLANNING COMMISSION DATE
DATE RECORDED
INSTRUMENT NO. DEED BOOK NO. PAGE NO.

20 0 20 40
SCALE IN FEET

DATUM:
(HZ) NAD 83
(VT) NAVD 88

60% SUBMITTAL

CONTRACT NO:	
PROJECT NO:	
	DATE:
DESIGNED:	
DRAFTED:	
CHECKED:	
APPROVED:	

REVISIONS

BY	NO	DATE	DESCRIPTION
GF	001		DEV. CONCEPT PLAN (30%)
GF	002	6/20/16	DEV. SITE PLAN

Gannett Fleming

COMMONWEALTH OF VIRGINIA
MARTHA JEAN AVERSO
Lic. No. 17470
PROFESSIONAL ENGINEER
6-20-16

VRE

VIRGINIA RAILWAY EXPRESS

ALEXANDRIA
PEDESTRIAN TUNNEL

DISCIPLINE:
CIVIL
MAINTENANCE OF TRAFFIC PLAN

SCALE: 1"=20'

DATE ISSUED: 6/20/16

DRAWING NO: C-115

LIST NO:

C:\pwworking\gfpw01\smello\d0593522\DSP-58349 C-115MTP.dwg, 6/21/2016 8:55:39 AM, smello

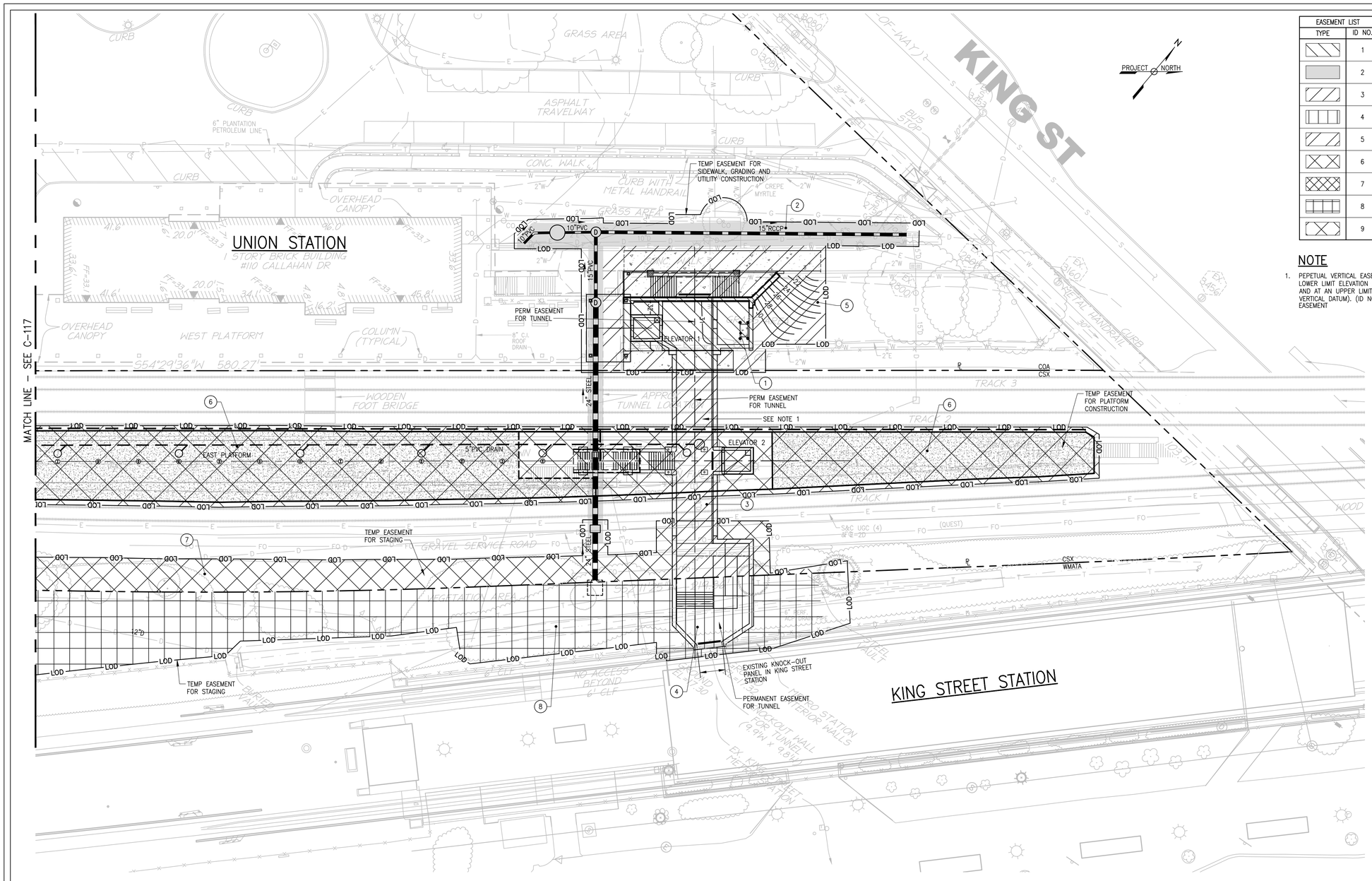

EASEMENT LIST				
TYPE	ID NO.	TYPE	PROPERTY OWNER	AREA (SF)
	1	PERMANENT	CITY OF ALEXANDRIA	–
	2	PERMANENT	CITY OF ALEXANDRIA	–
	3	PERMANENT	CSX	–
	4	PERMANENT	WMATA	–
	5	TEMPORARY/CONSTRUCTION	CITY OF ALEXANDRIA	–
	6	TEMPORARY/CONSTRUCTION	CSX	–
	7	TEMPORARY/CONSTRUCTION	CSX	–
	8	TEMPORARY/CONSTRUCTION	WMATA	–
	9	TEMPORARY/CONSTRUCTION	CITY OF ALEXANDRIA	–

NOTE

1. PEPETUAL VERTICAL EASEMENT FOR TUNNEL FLOOR AT A LOWER LIMIT ELEVATION OF 12.33 (NAVD88 VERTICAL DATUM) AND AT AN UPPER LIMIT ELEVATION OF 17.31 (NAVD88 VERTICAL DATUM). (ID NO. 1, 3, AND 4– PERMANENT EASEMENT

APPROVED
SPECIAL USE PERMIT NO.
DEPARTMENT OF PLANNING & ZONING

DIRECTOR DATE

DEPARTMENT OF TRANSPORTATION & ENVIRONMENTAL SERVICES
SITE PLAN NO. DSP2011-0027

DIRECTOR DATE

CHAIRMAN, PLANNING COMMISSION DATE

DATE RECORDED

INSTRUMENT NO. DEED BOOK NO. PAGE NO.

DATUM:
(HZ) NAD 83
(VT) NAVD 88

60% SUBMITTAL

CONTRACT NO:	
PROJECT NO:	
	DATE:
DESIGNED:	
DRAFTED:	
CHECKED:	
APPROVED:	

REVISIONS

BY	NO	DATE	DESCRIPTION
GF	001		DEV. CONCEPT PLAN (30%)
GF	002	6/20/16	DEV. SITE PLAN

Gannett Fleming

COMMONWEALTH OF VIRGINIA
MARTHA JEAN AVERSO
Lic. No. 17470
PROFESSIONAL ENGINEER
6-20-16

VRE

VIRGINIA RAILWAY EXPRESS

ALEXANDRIA
PEDESTRIAN TUNNEL

DISCIPLINE:
CIVIL
EASEMENT PLAN 1

DRAWING NO:
C-116

LIST NO:

SCALE: 1"=20'

DATE ISSUED: 6/20/16

C:\pwworking\gfpw01\smellis\d0593522\DSP-58349 C-116EP.dwg, 6/21/2016 8:58:15 AM, smellis

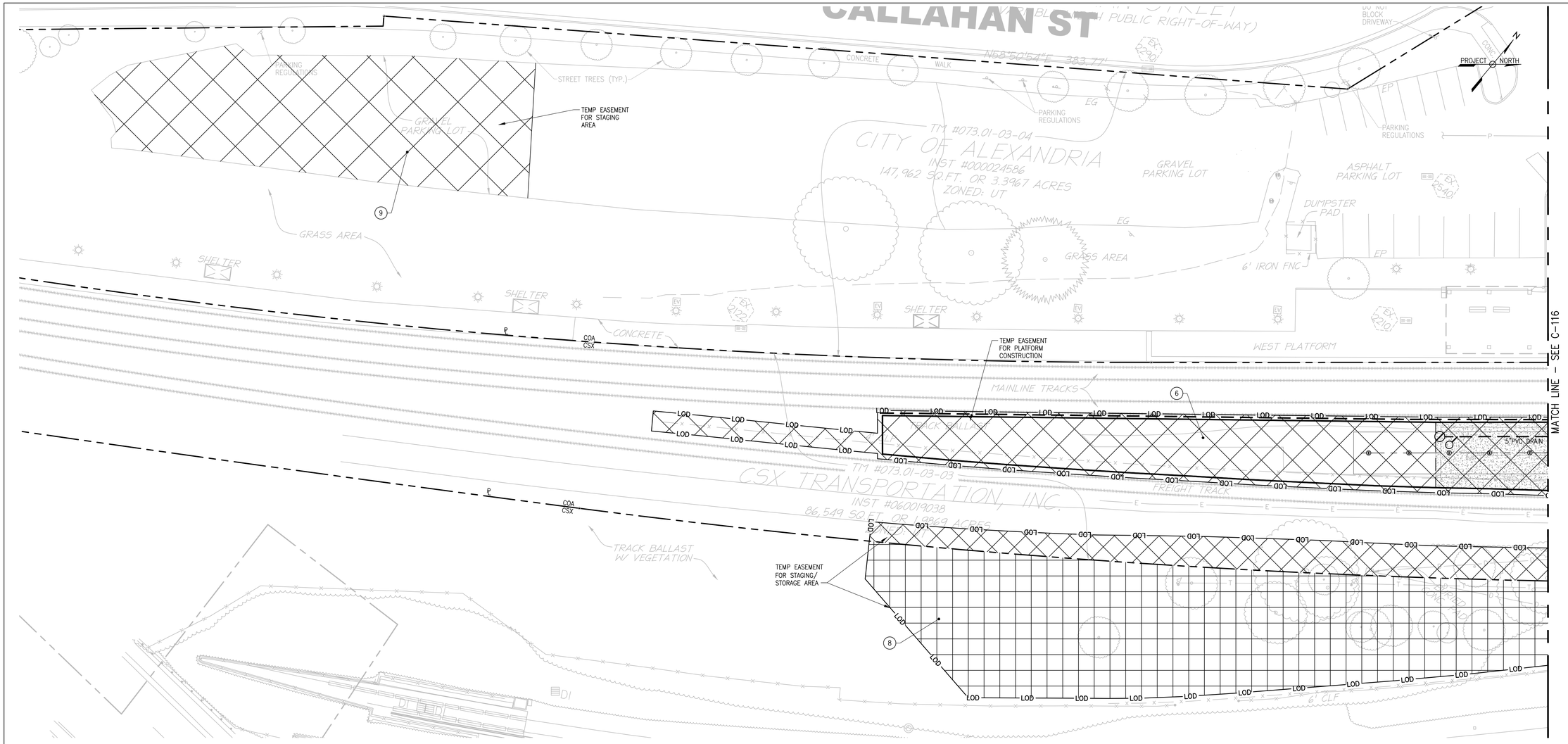

NOTES

1. SEE EASEMENT SUMMARY ON SHEET C-115.

APPROVED
SPECIAL USE PERMIT NO.
DEPARTMENT OF PLANNING & ZONING

DIRECTOR DATE

DEPARTMENT OF TRANSPORTATION & ENVIRONMENTAL SERVICES
SITE PLAN NO. DSP2011-0027

DIRECTOR DATE

CHAIRMAN, PLANNING COMMISSION DATE

DATE RECORDED

INSTRUMENT NO. DEED BOOK NO. PAGE NO.

20 0 20 40
SCALE IN FEET

DATUM:
(HZ) NAD 83
(VT) NAVD 88

60% SUBMITTAL

CONTRACT NO:	
PROJECT NO:	
	DATE:
DESIGNED:	
DRAFTED:	
CHECKED:	
APPROVED:	

REVISIONS

BY	NO	DATE	DESCRIPTION
GF	001		DEV. CONCEPT PLAN (30%)
GF	002	6/20/16	DEV. SITE PLAN

Gannett Fleming

COMMONWEALTH OF VIRGINIA
MARTHA JEAN AVERSO
Lic. No. 17470
PROFESSIONAL ENGINEER
6-20-16

VRE

VIRGINIA RAILWAY EXPRESS

ALEXANDRIA
PEDESTRIAN TUNNEL

DISCIPLINE:
CIVIL
EASEMENT PLAN 2

SCALE: 1"=20'

DATE ISSUED: 6/20/16

DRAWING NO: C-117

LIST NO:

C:\pwworking\gfpw01\smello\d0593522\DSP-58349 C-116EP.dwg, 6/21/2016 8:59:04 AM, smello

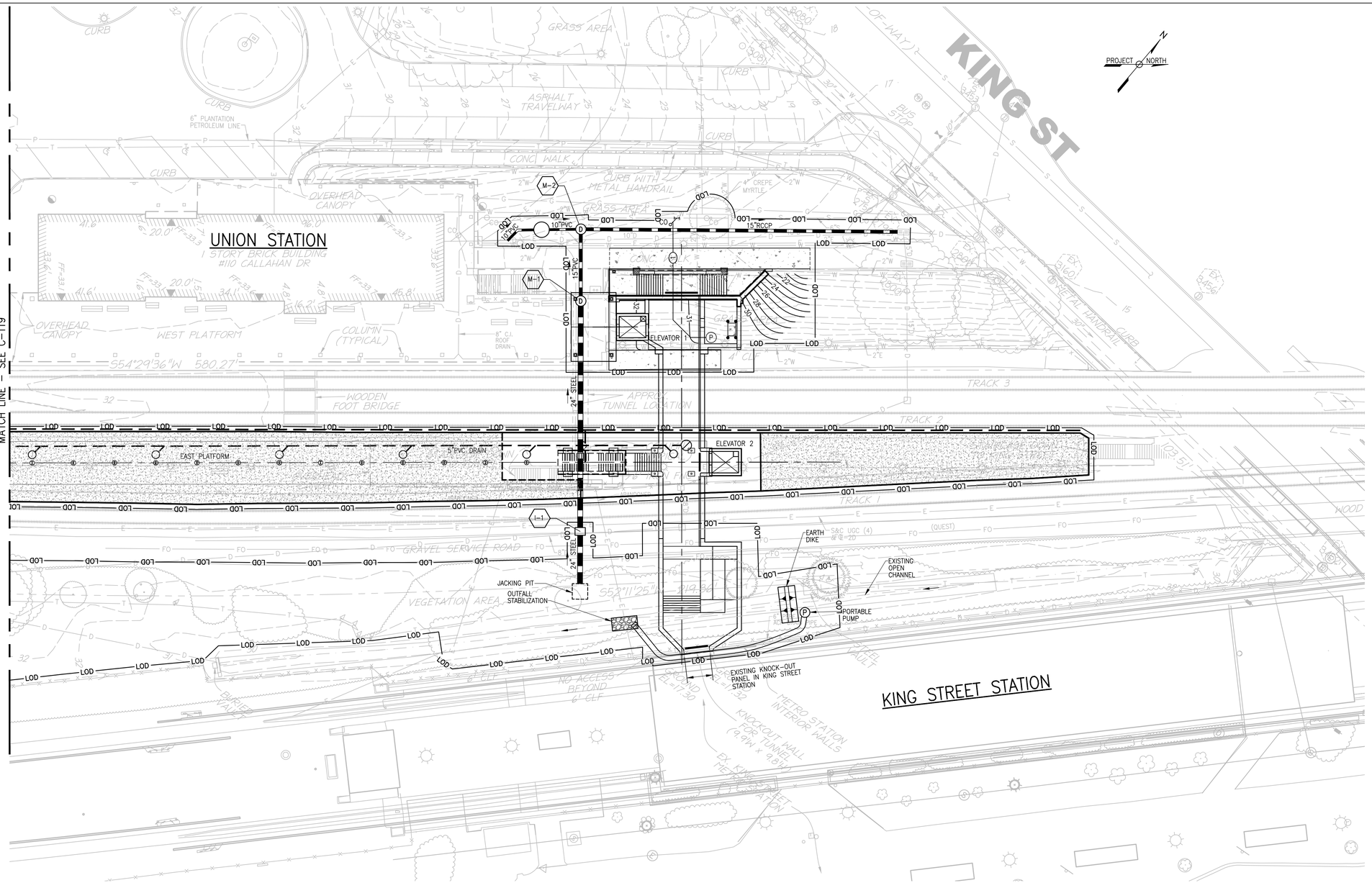

NOTES

1. SEE SEQUENCE OF CONSTRUCTION ON SHEET.
2. THE LIMITS OF DISTURBANCE AS SHOWN ON THIS PLAN ARE THE ULTIMATE LIMITS FOR THE PROJECT. THE CONTRACTOR MUST APPLY SEPARATELY TO THE DEPARTMENT OF TRANSPORTATION AND ENVIRONMENTAL SERVICES (T&ES) FOR ANY WORK, INCLUDING THE PLACEMENT OF CONSTRUCTION FENCING, WITHIN THE PUBLIC RIGHT-OF-WAY. THE CITY WILL NOT ALLOW INCLUSION OF ANY PORTION OF THE PUBLIC RIGHT-OF-WAY, INCLUDING SIDEWALKS, INTO THE PROJECT AREA FOR THE PROJECT DURATION. WORK AND ASSOCIATED CLOSURES IN THE PUBLIC RIGHT-OF-WAY WILL BE PERMITTED SEPARATELY ON AN AS NEEDED BASIS BY T&ES.
3. A SEDIMENTATION AREA MUST BE PROVIDED AT EACH STABILIZED CONSTRUCTION ENTRANCE AS SHOWN ON THE PLANS. SEDIMENTATION AREA MUST BE ABLE TO HANDLE WASH RACK RUNOFF AND A MINIMUM OF 3' X 3' AND A MINIMUM DEPTH OF 6".
4. THE APPLICANT/DEVELOPER SHALL CALL ALEXANDRIA ARCHAEOLOGY IMMEDIATELY (703-746-4399) IF ANY BURIED STRUCTURAL REMAINS (WALL FOUNDATIONS, WELLS, PRIVIES, CISTERNS, ETC.) OR CONCENTRATIONS OF ARTIFACTS ARE DISCOVERED DURING DEVELOPMENT. WORK MUST CEASE IN THE AREA OF THE DISCOVERY UNTIL A CITY ARCHAEOLOGIST COMES TO THE SITE AND RECORDS THE FINDS.
5. THE APPLICANT/DEVELOPER SHALL NOT ALLOW ANY METAL DETECTION AND/OR ARTIFACT COLLECTION TO BE CONDUCTED ON THE PROPERTY, UNLESS AUTHORIZED BY ALEXANDRIA ARCHAEOLOGY. FAILURE TO COMPLY SHALL RESULT IN PROJECT DELAYS.
6. CONTRACTOR IS TO PROVIDE ONSITE CONSTRUCTION ENTRANCE WASH DOWN AND DUST CONTROL SOURCE OF WATER. ALTERNATE WATER SOURCE MAY BE PROVIDED BY ADJACENT FIRE HYDRANT AS APPROVED BY THE INSPECTOR.
7. STOCKPILING PROCEDURES SHALL BE WITHIN LIMITS OF CONSTRUCTION. PROVIDED ADDITIONAL EROSION AND SEDIMENT CONTROLS AS DIRECTED.

LEGEND

GENERAL CIVIL / SITE

- 353 — EXISTING MINOR CONTOUR
- 350 — EXISTING MAJOR CONTOUR
- EXISTING EASEMENT
- EXISTING TREELINE
- EXISTING STREAM EDGE
- EXISTING STORM DRAIN
- EXISTING ROAD EDGE
- EXISTING FENCE
- EXISTING TREE
- PT 105 TRAV — TRAVERSE POINT
- 340 — PROPOSED MAJOR CONTOUR
- LOD — LIMIT OF DISTURBANCE
- SF — SILT FENCE
- TP — TREE PROTECTION
- SCE — STABILIZED CONSTRUCTION ENTRANCE
- CIP — CURB INLET PROTECTION
- P — PUMPS
- HOSE

APPROVED
SPECIAL USE PERMIT NO.
DEPARTMENT OF PLANNING & ZONING
DIRECTOR DATE
DEPARTMENT OF TRANSPORTATION & ENVIRONMENTAL SERVICES
SITE PLAN NO. DSP2011-0027
DIRECTOR DATE
CHAIRMAN, PLANNING COMMISSION DATE
DATE RECORDED
INSTRUMENT NO. DEED BOOK NO. PAGE NO.

20 0 20 40
SCALE IN FEET

DATUM:
(HZ) NAD 83
(VT) NAVD 88

60% SUBMITTAL

CONTRACT NO:		REVISIONS			
PROJECT NO:		BY	NO	DATE	DESCRIPTION
	DATE:	GF	001		DEV. CONCEPT PLAN (30%)
DESIGNED:		GF	002	6/20/16	DEV. SITE PLAN
DRAFTED:					
CHECKED:					
APPROVED:					

Gannett Fleming

COMMONWEALTH OF VIRGINIA
MARTHA JEAN AVERSO
Lic. No. 17470
PROFESSIONAL ENGINEER
6-20-16

VRE

VIRGINIA RAILWAY EXPRESS

ALEXANDRIA
PEDESTRIAN TUNNEL

DISCIPLINE:
CIVIL
EROSION AND SEDIMENT
CONTROL PLAN 1

SCALE: 1"=20'
DATE ISSUED: 6/20/16

DRAWING NO: C-118
LIST NO:

C:\pwworking\gfpw01\smellio\d0593522\DSP-58349 C-118ESP.dwg, 6/21/2016 9:05:15 AM, smellio

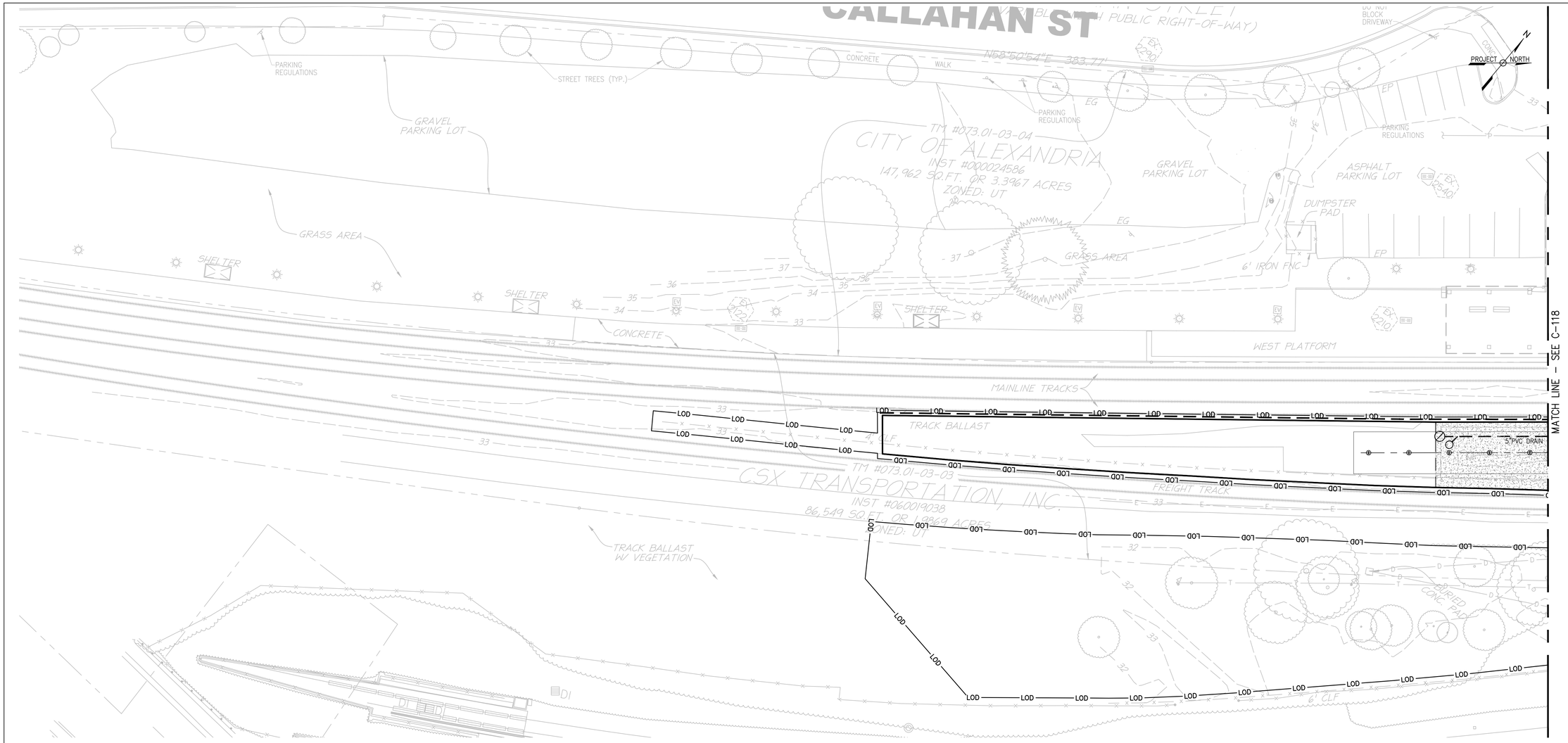

APPROVED
SPECIAL USE PERMIT NO.
DEPARTMENT OF PLANNING & ZONING

DIRECTOR DATE

DEPARTMENT OF TRANSPORTATION & ENVIRONMENTAL SERVICES
SITE PLAN NO. DSP2011-0027

DIRECTOR DATE

CHAIRMAN, PLANNING COMMISSION DATE

DATE RECORDED

INSTRUMENT NO. DEED BOOK NO. PAGE NO.

20 0 20 40
SCALE IN FEET

DATUM:
(HZ) NAD 83
(VT) NAVD 88

60% SUBMITTAL

CONTRACT NO:		REVISIONS			
PROJECT NO:		BY	NO	DATE	DESCRIPTION
	DATE:	GF	001		DEV. CONCEPT PLAN (30%)
		GF	002	6/20/16	DEV. SITE PLAN
DESIGNED:					
DRAFTED:					
CHECKED:					
APPROVED:					

Gannett Fleming

COMMONWEALTH OF VIRGINIA
MARTHA JEAN AVERSO
Lic. No. 17470
PROFESSIONAL ENGINEER
6-20-16

VRE

VIRGINIA RAILWAY EXPRESS

ALEXANDRIA
PEDESTRIAN TUNNEL

DISCIPLINE:
CIVIL
EROSION AND SEDIMENT
CONTROL PLAN 2

SCALE: 1"=20'

DATE ISSUED: 6/20/16

DRAWING NO: C-119

LIST NO:

C:\pwworking\gfpw01\smello\d0593522\DSP-58349 C-118ESP.dwg, 6/21/2016 9:06:09 AM, smello

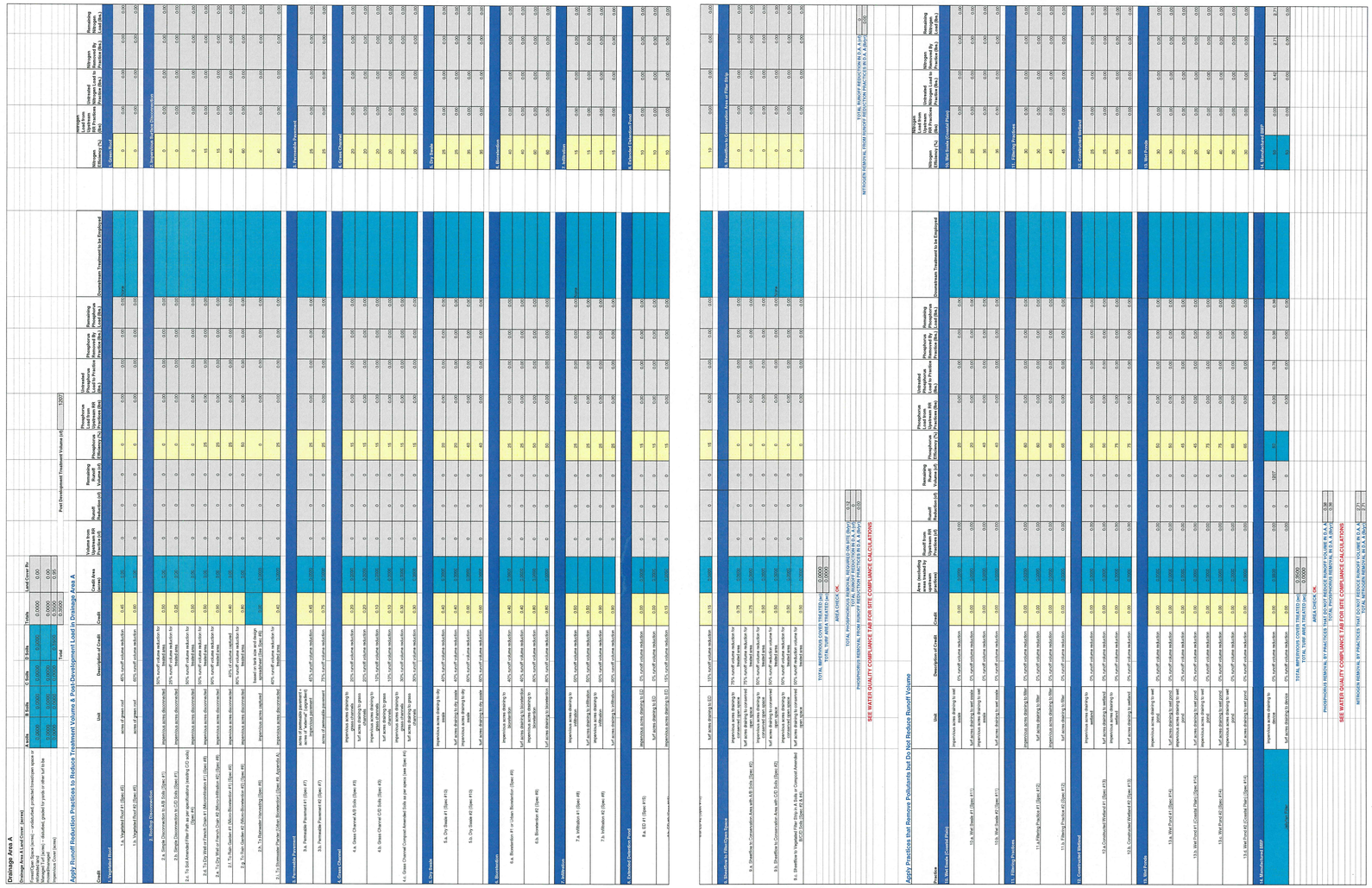

Virginia Runoff Reduction Method ReDevelopment Worksheet - v2.8 - June 2014
To be used w/ 2011 BMP Standards and Specifications
Site Data

Project Name: VRE ALEXANDRIA PEDESTRIAN TUNNEL
Date: 5/2/2016

	data input cells
	calculation cells
	constant values

Post-ReDevelopment Project & Land Cover Information

Total Disturbed Acreage 1.07

Constants

Annual Rainfall (inches)	42
Target Rainfall Event (inches)	1.00
Phosphorus EMC (mg/L)	0.26
Target Phosphorus Target Load (lb/acre/yr)	0.41
Rv	0.90

Nitrogen EMC (mg/L) 1.86

Pre-ReDevelopment Land Cover (acres)

	A soils	B Soils	C Soils	D Soils	Totals
Forest/Open Space (acres) – undisturbed, protected forest/open space or reforested land	0.2000	0.0000	0.0000	0.0000	0.0000
Managed Turf (acres) – disturbed, graded for yards or other turf to be mowed/managed	0.0000	0.0000	0.0000	0.1400	0.1400
Impervious Cover (acres)	0.0500	0.0000	0.0000	0.1300	0.1300
				Total	0.2700

Post-ReDevelopment Land Cover (acres)

	A soils	B Soils	C Soils	D Soils	Totals
Forest/Open Space (acres) – undisturbed, protected forest/open space or reforested land	0.0000	0.0000	0.0000	0.0000	0.0000
Managed Turf (acres) – disturbed, graded for yards or other turf to be mowed/managed	0.0000	0.0000	0.0000	0.0900	0.0900
Impervious Cover (acres)	0.0500	0.0000	0.0000	0.1800	0.1800
				Total	0.2700

Area Check	Okay	Okay	Okay

Rv Coefficients

	A soils	B Soils	C Soils	D Soils
Forest/Open Space	0.02	0.03	0.04	0.05
Managed Turf	0.15	0.20	0.22	0.25
Impervious Cover	0.95	0.95	0.95	0.95

Land Cover Summary Pre-ReDevelopment	Listed	Adjusted[1]
Forest/Open Space Cover (acres)	0.0000	0.0000
Composite Rv(forest)	0.00	0.00
% Forest	0%	0%
Managed Turf Cover (acres)	0.1400	0.0900
Composite Rv(turf)	0.25	0.25
% Managed Turf	52%	41%
Impervious Cover (acres)	0.1300	0.1300
Rv(impervious)	0.95	0.95
% Impervious	48%	59%
Total Site Area (acres)	0.27	0.22
Site Rv	0.59	0.66
Pre-Development Treatment Volume (acre-ft)	0.0132	0.0122
Pre-Development Treatment Volume (cubic feet)	575	530
Pre-Development Load (TP) (lb/yr)	0.36	0.33

Land Cover Summary Post-ReDevelopment	
Forest/Open Space Cover (acres)	0.0000
Composite Rv(forest)	0.00
% Forest	0%
Managed Turf Cover (acres)	0.0900
Composite Rv(turf)	0.25
% Managed Turf	41%
ReDev. Impervious Cover (acres)	0.1300
Rv(impervious)	0.95
% Impervious	59%
Total ReDev. Site Area (acres)	0.2200
ReDev. Site Rv	0.66
Post-ReDevelopment Treatment Volume (acre-ft)	0.0122
Post-ReDevelopment Treatment Volume (cubic feet)	530
Post-ReDevelopment Load (TP) (lb/yr)	0.33

Land Cover Summary Post-ReDevelopment New Impervious	
New Impervious Cover (acres)	0.0500
Rv(impervious)	0.95
% Impervious	100%
Total New Dev. Site Area (acres)	0.0500
New Dev. Site Rv	0.95
Post-Development Treatment Volume (acre-ft)	0.0040
Post-Development Treatment Volume (cubic feet)	172
Post-Development Load (TP) (lb/yr)	0.11

[1] Adjusted **Land Cover Summary** reflects the pre redevelopment land cover minus the pervious land cover (forest/open space or managed turf) acreage proposed for new impervious cover. The adjusted total acreage is consistent with the Post Redevelopment acreage (minus the acreage of new impervious cover). The load reduction requirement for the new impervious cover to meet the new development load limit is computed in **Columns I**.

Maximum % Reduction Required Below Pre-ReDevelopment Load	10%
TP Load Reduction Required for Redeveloped Area (lb/yr)	0.03
Total Load Reduction Required (lb/yr)	0.12
Pre-Development Load (TN) (lb/yr) 2.59	Post-Development Load (TN) (lb/yr) 3.15
TP Load Reduction Required for New Impervious Area (lb/yr)	0.09

Site Results

	D.A. A	D.A. B	D.A. C	D.A. D	D.A. E	AREA CHECK
IMPERVIOUS COVER	0.3600	0.0000	0.0000	0.0000	0.0000	AREA EXCEEDED!
IMPERVIOUS COVER TREATED	0.3600	0.0000	0.0000	0.0000	0.0000	AREA EXCEEDED!
TURF AREA	0.0000	0.0000	0.0000	0.0000	0.0000	OK
TURF AREA TREATED	0.0000	0.0000	0.0000	0.0000	0.0000	OK
AREA CHECK	OK	OK	OK	OK	OK	OK

Phosphorous

TOTAL PHOSPHOROUS LOAD REDUCTION REQUIRED (LB/YEAR)	0.12
RUNOFF REDUCTION (cf)	0
PHOSPHOROUS LOAD REDUCTION ACHIEVED (LB/YR)	0.38
ADJUSTED POST-DEVELOPMENT PHOSPHOROUS LOAD (TP) (lb/yr)	0.06
REMAINING PHOSPHOROUS LOAD REDUCTION (LB/YR) NEEDED	CONGRATULATIONS!! YOU EXCEEDED THE TARGET REDUCTION BY 0.3 LB/YEAR!

Nitrogen (for information purposes)

RUNOFF REDUCTION (cf)	0
NITROGEN LOAD REDUCTION ACHIEVED (LB/YR)	2.71
ADJUSTED POST-DEVELOPMENT NITROGEN LOAD (TP) (lb/yr)	0.45

APPROVED
SPECIAL USE PERMIT NO.
DEPARTMENT OF PLANNING & ZONING

DIRECTOR DATE
DEPARTMENT OF TRANSPORTATION & ENVIRONMENTAL SERVICES
SITE PLAN NO. DSP2011-0027

DIRECTOR DATE

CHAIRMAN, PLANNING COMMISSION DATE

DATE RECORDED

INSTRUMENT NO. DEED BOOK NO. PAGE NO.

DATUM:
(HZ) NAD 83
(VT) NAVD 88

60% SUBMITTAL

CONTRACT NO:		REVISIONS			
PROJECT NO:		BY	NO	DATE	DESCRIPTION
	DATE:	GF	001		DEV. CONCEPT PLAN (30%)
DESIGNED:		GF	002	6/20/16	DEV. SITE PLAN
DRAFTED:					
CHECKED:					
APPROVED:					

Gannett Fleming

COMMONWEALTH OF VIRGINIA
MARTHA JEAN AVERSO
Lic. No. 17470
PROFESSIONAL ENGINEER
6-20-16

VRE

VIRGINIA RAILWAY EXPRESS

ALEXANDRIA
PEDESTRIAN TUNNEL

DISCIPLINE:
CIVIL
VRRM WORKSHEETS AND
STORM SEWER COMPUTATION

DRAWING NO:
C-120

LIST NO:

SCALE: NONE

DATE ISSUED: 6/20/16

C:\pwworking\gfpw01\smelco\d0593522\DSP-58349 C-120SSC.dwg, 6/21/2016 9:07:30 AM, smelco

Virginia Runoff Reduction Method ReDevelopment Worksheet - v2.8 - June 2014

Site Data Summary

Total Rainfall = 43 inches

Site Land Cover Summary

	A Soils	B Soils	C Soils	D Soils	Total	% of Total
Forest (acres)	0.0000	0.0000	0.0000	0.0000	0.0000	*0.00*
Turf (acres)	0.0000	0.0000	0.0000	0.0900	0.0900	*33.33*
Impervious (acres)	0.0000	0.0000	0.0000	0.1800	0.1800	*66.67*
					0.2700	*100.00*

Sum of Drainage Areas is greater than Total Site Area

Site Rv	0.72
Post Development Treatment Volume (ft^3)	702
Post Development TP Load (lb/yr)	0.44
Post Development TN Load (lb/yr)	3.16
Total TP Load Reduction Required (lb/yr)	0.12

Total Runoff Volume Reduction (ft^3)	0
Total TP Load Reduction Achieved (lb/yr)	0.38
Total TN Load Reduction Achieved (lb/yr)	2.71
Adjusted Post Development TP Load (lb/yr)	0.06
Remaining Phosphorous Load Reduction (Lb/yr) Required	0.00

Drainage Area Summary

	D.A. A	D.A. B	D.A. C	D.A. D	D.A. E	Total
Forest (acres)	0.0000	0.0000	0.0000	0.0000	0.0000	*0.0000*
Turf (acres)	0.0000	0.0000	0.0000	0.0000	0.0000	*0.0000*
Impervious (acres)	0.3500	0.0000	0.0000	0.0000	0.0000	*0.3500*
						0.3500

Drainage Area Compliance Summary

	D.A. A	D.A. B	D.A. C	D.A. D	D.A. E	Total
TP Load Red. (lb/yr)	0.38	0.00	0.00	0.00	0.00	*0.38*
TN Load Red. (lb/yr)	2.71	0.00	0.00	0.00	0.00	*2.71*

Channel and Flood Protection

	Weighted CN	1-year storm Adjusted CN	2-year storm Adjusted CN	10-year storm Adjusted CN
Target Rainfall Event (in)		2.50	3.30	5.01
D.A. A CN	98	98	98	98
D.A. B CN	0	44	#N/A	#N/A
D.A. C CN	0	44	#N/A	#N/A
D.A. D CN	0	44	#N/A	#N/A
D.A. E CN	0	44	#N/A	#N/A

Storm Sewer Computations
LD-229
INCIDENCE PROBABILITY

Decription: **Post-Development Conditions**
100 Year — **Structure I-1 to Existing 2790**

Project: VRE - Alexandria pedestrian Tunnel
Date: 6/20/16
Designer: SKD
Checked:

From Point	To Point	Area Drain "A"	Run-off Coef	CA		Inlet Time	Rainfall	Runoff, Q	Invert Elevations		Length	Slope	Required Pipe Dia	Dia.	Capacity	Velocity	Flow Time (Min)		Remarks
		ACRES	C	Increment	Accumulated	Min	IN/Hr	CFS	Upper End	Lower End	FT	FT/FT	Inches	Inches	CFS	FPS	Increment	Accum	
(1)	(2)	(3)	(4)	(5)	(6)	(7)	(8)	(9)	(10)	(11)	(12)	(13)		(14)	(15)	(16)	(17)		(18)
I-1	M-1	0.28	0.90	0.25	0.25	5.00	9.10	2.29	20.7	19.8	86	0.01047	7.55760	24	23.13	4.31	0.33	5.33	
M-1	M-2	0	0.90	0.00	0.25	5.33	8.94	2.25	13.90	13.40	22.00	0.02273	6.49087	15	9.74	5.63	0.07	5.40	
M-2	EX 2790	0.35	0.9	0.32	0.57	5.40	8.91	5.05	13.40	10.50	121.00	0.02397	8.69929	15	10.00	5.74	0.35	5.75	

WATER QUALITY VOLUME BMP DATA BLOCKS

Project Description

Development or **Redevelopment**

Drainage Area	Impervious	Pervious	Total
Site Area	0.18 AC.	0.09 AC.	0.27 AC.
On-Site Treated	NONE	NONE	NONE
Off-Site Treated	0.35 AC.	NONE	0.35 AC.
Total Treated	0.35 AC.	NONE	0.35 AC.
Any On-Site Disconnected by a Vegetated Buffer (25 ft)	NONE		
Total On-Site Treated or Disconnected			NONE

Water Treatment on site

BMP Type	*Area treated by BMP (acres)*	*Impervious area treated by BMP (acres)*	*BMP efficiency (%)*
JELLY FISH FILTER	0.35 AC.	0.35 AC.	50%

Miscellaneous

Total WQV treated: yes no
Detention on site: yes no

Project is within which watershed? POTOMAC RIVER WATERSHED

Project discharges to which body of water? OUTFALLS TO HOOFF'S RUN

APPROVED
SPECIAL USE PERMIT NO.
DEPARTMENT OF PLANNING & ZONING
DIRECTOR DATE
DEPARTMENT OF TRANSPORTATION & ENVIRONMENTAL SERVICES
SITE PLAN NO. DSP2011-0027
DIRECTOR DATE
CHAIRMAN, PLANNING COMMISSION DATE
DATE RECORDED
INSTRUMENT NO. DEED BOOK NO. PAGE NO.

DATUM:
(HZ) NAD 83
(VT) NAVD 88

60% SUBMITTAL

CONTRACT NO:
PROJECT NO:
DATE:
DESIGNED:
DRAFTED:
CHECKED:
APPROVED:

REVISIONS

BY	NO	DATE	DESCRIPTION
GF	001		DEV. CONCEPT PLAN (30%)
GF	002	6/20/16	DEV. SITE PLAN

Gannett Fleming

COMMONWEALTH OF VIRGINIA
MARTHA JEAN AVERSO
Lic. No. 17470
PROFESSIONAL ENGINEER
6-20-16

VRE

VIRGINIA RAILWAY EXPRESS

ALEXANDRIA
PEDESTRIAN TUNNEL

DISCIPLINE:
CIVIL
VRRM WORKSHEETS AND
STORM SEWER COMPUTATION

DRAWING NO: C-121

LIST NO:

SCALE: NONE
DATE ISSUED: 6/20/16

C:\pwworking\gfpw01\smello\d0593522\DSP-58349 C-120SSC.dwg, 6/21/2016 9:08:08 AM, smello

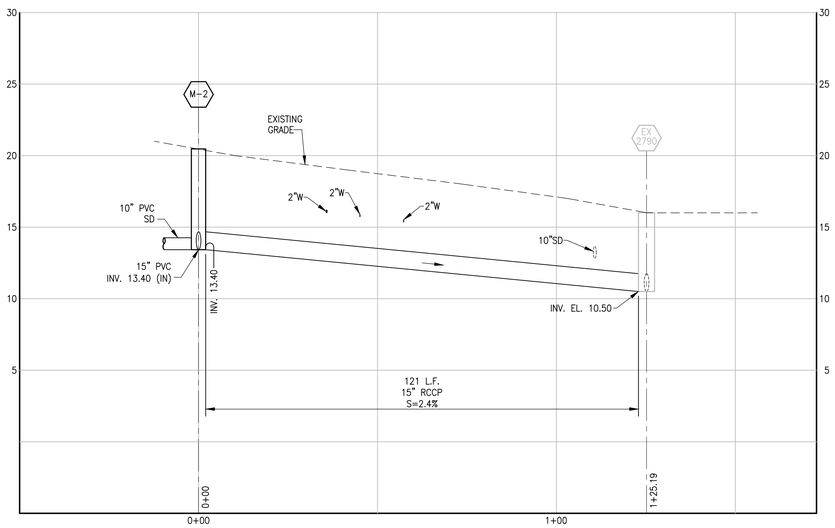

M-2 – EX. INLET 2790

SCALE: HORIZ. 1"=20'
VERT. 1"=5'

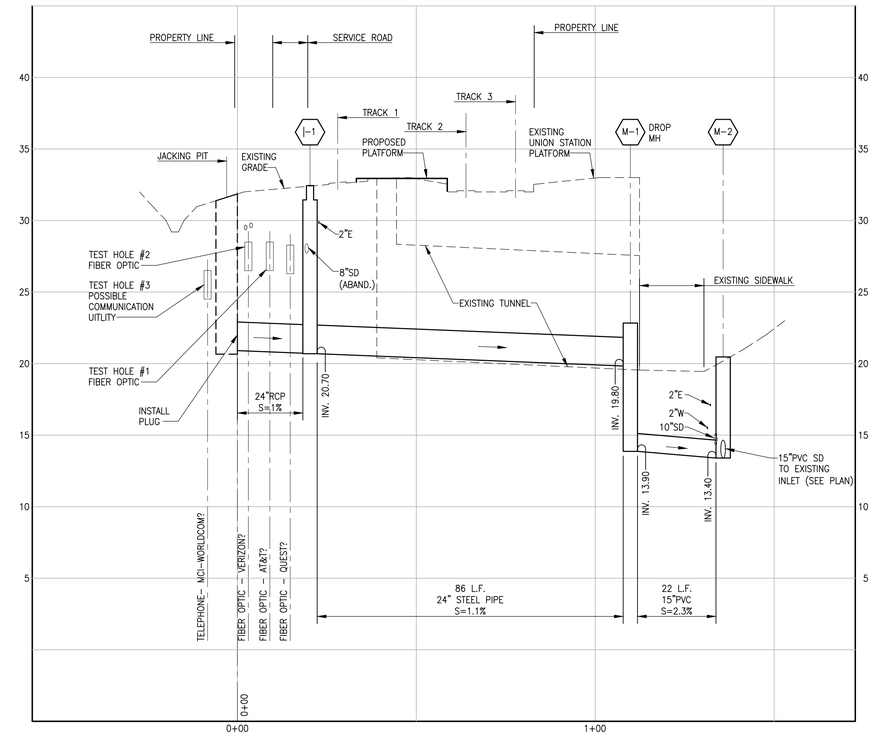

STORM DRAIN PROFILE

SCALE: HORIZ. 1"=20'
VERT. 1"=5'

HORIZONTAL
20 0 20 40
5 0 5 10
VERTICAL
SCALE IN FEET

DATUM:
(HZ) NAD 83
(VT) NAVD 88

APPROVED
SPECIAL USE PERMIT NO.
DEPARTMENT OF PLANNING & ZONING
DIRECTOR DATE
DEPARTMENT OF TRANSPORTATION & ENVIRONMENTAL SERVICES
SITE PLAN NO. DSP2011-0027
DIRECTOR DATE
CHAIRMAN, PLANNING COMMISSION DATE
DATE RECORDED
INSTRUMENT NO. DEED BOOK NO. PAGE NO.

60% SUBMITTAL

CONTRACT NO:	
PROJECT NO:	
	DATE:
DESIGNED:	
DRAFTED:	
CHECKED:	
APPROVED:	

REVISIONS

BY	NO	DATE	DESCRIPTION
GF	001		DEV. CONCEPT PLAN (30%)
GF	002	6/20/16	DEV. SITE PLAN

Gannett Fleming

COMMONWEALTH OF VIRGINIA
MARTHA JEAN AVERSO
Lic. No. 17470
PROFESSIONAL ENGINEER
6-20-16

VRE

VIRGINIA RAILWAY EXPRESS

ALEXANDRIA
PEDESTRIAN TUNNEL

DISCIPLINE:
CIVIL
STORM DRAIN PROFILE

DRAWING NO:
C-201

LIST NO:

SCALE: AS SHOWN

DATE ISSUED: 6/20/16

C:\pwworking\gfpv01\smello\d0593522\DSP-58349 C-201PRO.dwg, 6/21/2016 9:12:26 AM, smello

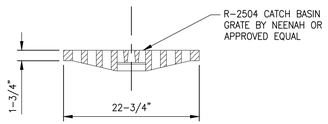

CATCH BASIN GRATE
SCALE: 1"=1'-0"

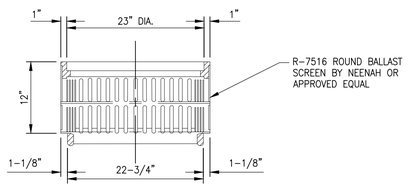

BALLAST SCREEN
SCALE: 1"=1'-0"

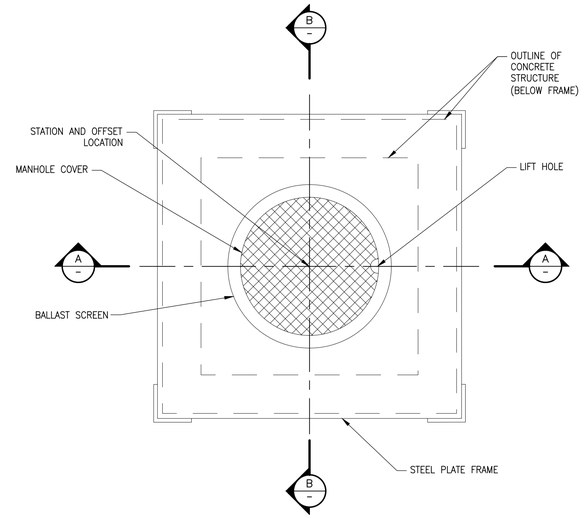

TYPE I BALLAST DRAIN – PLAN
SCALE: 1"=1'-0"

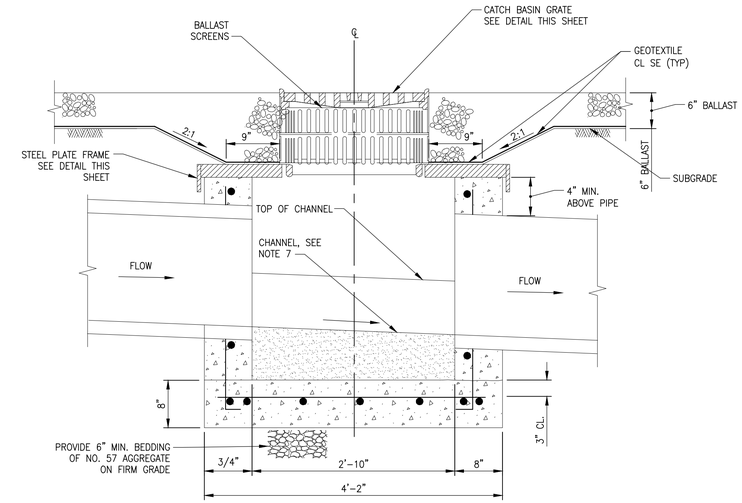

A SECTION
SCALE: 1"=1'-0"

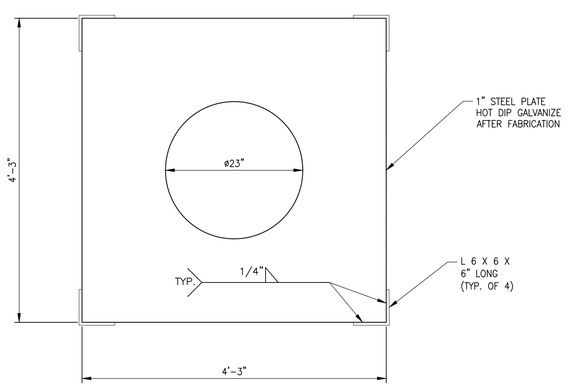

STEEL PLATE FRAME
SCALE: 1"=1'-0"

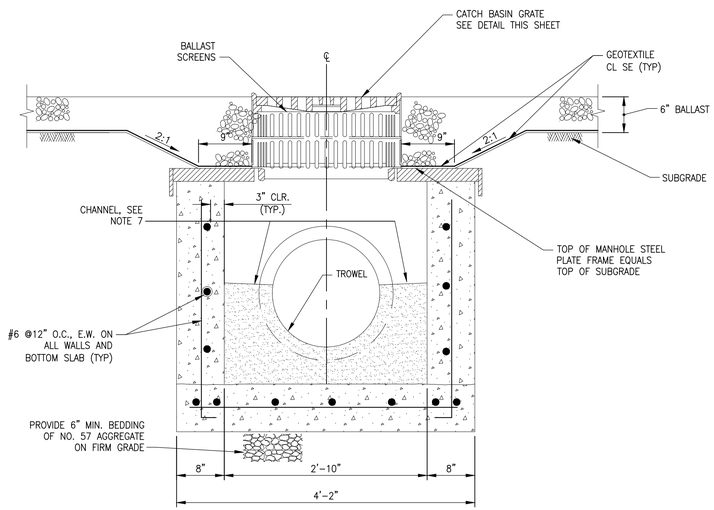

B SECTION
SCALE: 1"=1'-0"

BI BALLAST DRAIN INLET
SCALE: 1"=1-0"

GENERAL NOTES:

1. STRUCTURE SHALL BE CONSTRUCTED USING CAST-IN-PLACE OR PRE-CAST CONCRETE.
2. CONCRETE SHALL MEET fc' = 4500 PSI FOR PRE-CAST UNITS AND fc' = 3500 PSI FOR STRUCTURES CAST-IN-PLACE.
3. SUBMIT SHOP DRAWINGS PER REQUIREMENTS OF SPECIFICATIONS.
4. ALL REINFORCING STEEL SHALL CONFORM TO ASTM A-615, GRADE 60, AND SHALL BE EPOXY COATED. CONCRETE COVER OVER ALL REINFORCING STEEL SHALL MEET THE REQUIREMENT OF LATEST VERSION OF ACI 318. ALL REBAR LAPS, BENDS AND EMBEDMENT DEPTHS SHALL MEET THE REQUIREMENT OF LATEST VERSION OF ACI 318.
5. PRECAST INLET JOINTS – THE MANUFACTURE SHALL FORM MALE AND FEMALE ENDS OF JOINTS USING THEIR OWN DESIGN. THE JOINTS SHALL BE SEALED BY THE CONTRACTOR AND MADE WATERTIGHT USING THE MANUFACTURER'S RECOMMENDED ASTM OR AASHTO APPROVED SEALANT.
6. SEE DETAILS ON DR-16 FOR ADDITIONAL REINFORCING AT WALL OPENING.

60% SUBMITTAL

CONTRACT NO:		REVISIONS			
PROJECT NO:		BY	NO	DATE	DESCRIPTION
	DATE:	GF	001		DEV. CONCEPT PLAN (30%)
DESIGNED:		GF	002	6/20/16	DEV. SITE PLAN
DRAFTED:					
CHECKED:					
APPROVED:					

Gannett Fleming

COMMONWEALTH OF VIRGINIA
MARTHA JEAN AVERSO
Lic. No. 17470
PROFESSIONAL ENGINEER
6-20-16

VRE

VIRGINIA RAILWAY EXPRESS

ALEXANDRIA
PEDESTRIAN TUNNEL

DISCIPLINE:
CIVIL
STORM DRAIN DETAILS

DRAWING NO:
C-501

LIST NO:

SCALE: NONE

DATE ISSUED: 6/20/16

C:\pwworking\gfpa01\smello\d0593522\DSP-58349 C-501DET.dwg, 6/21/2016 9:13:49 AM, smello

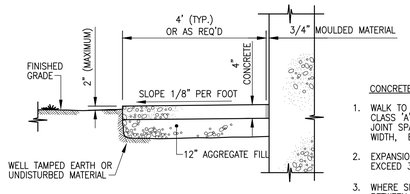

SECTIONAL ELEVATION AGAINST STRUCTURE

CONCRETE WALK NOTES

1. WALK TO BE CONSTRUCTED WITH CLASS "A" CONCRETE WITH TOOLED JOINT SPACING EQUAL TO WALK WIDTH, BUT NOT TO EXCEED 6'-0".
2. EXPANSION JOINT SPACING NOT TO EXCEED 30'-0".
3. WHERE SIDEWALK IS INSTALLED BETWEEN SLUDGE THICKENING BLDG AND SLUDGE HOLDING TANK. ELIMINATE 1/8" PER FOOT CROSS SLOPE.

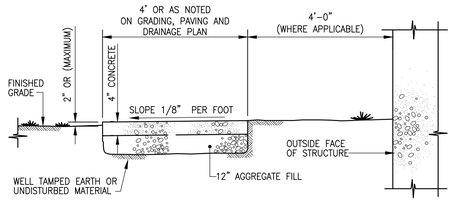

SECTIONAL ELEVATION ELSEWHERE

CW CONCRETE WALK
SCALE: NOT TO SCALE

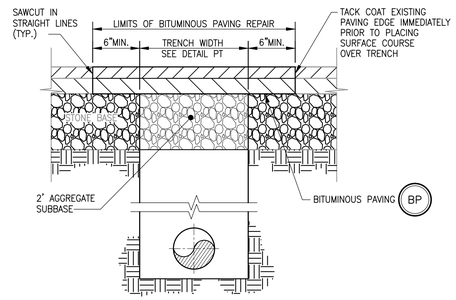

TR TRENCH REPAIR
SCALE: NOT TO SCALE

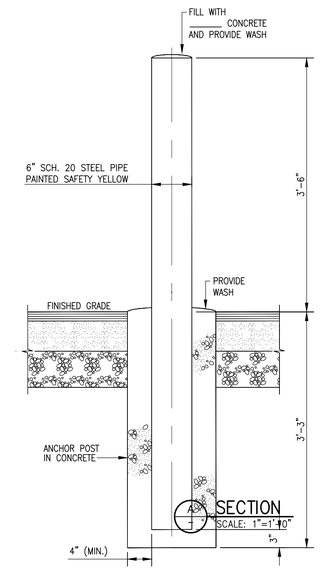

SECTIONAL ELEVATION

GP GUARD POST
SCALE: (NOT TO SCALE)

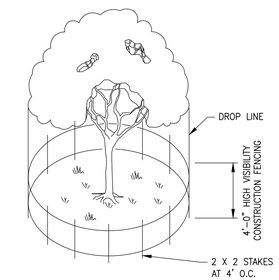

NOTE:
DRIVE STAKES FIRMLY INTO GROUND AT LEAST 12"

TP TREE PROTECTION
SCALE: N.T.S.

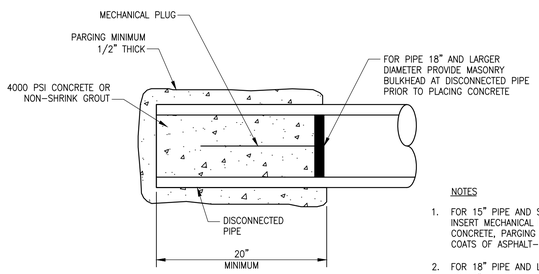

NOTES

1. FOR 15" PIPE AND SMALLER DIAMETER, INSERT MECHANICAL PLUGS, PLACE CONCRETE, PARGING AND COAT WITH TWO COATS OF ASPHALT-BASED COATING.
2. FOR 18" PIPE AND LARGER DIAMETER SAME AS 15" AND SMALLER EXCEPT MASONRY BULKHEAD MAY BE SUBSTITUTED FOR MECHANICAL PLUG.

PP PIPE PLUG/BULKHEAD
SCALE: NOT TO SCALE

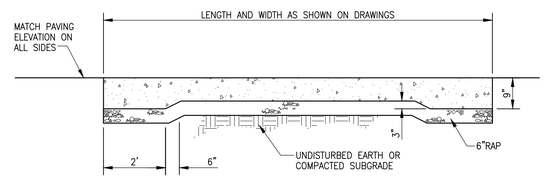

NOTE: EQUIPMENT PAD SHALL BE 9" THICK 4,000 PSI CONCRETE. REINFORCING SHALL CONSIST OF #5 @ 12" BOTH WAYS WITH 2" OF COVER. PADS SHALL BE CONSTRUCTED ON 6" OF RECYCLED ASPHALT PAVING.

EP EQUIPMENT PAD
SCALE: NOT TO SCALE

60% SUBMITTAL

CONTRACT NO:		REVISIONS			
PROJECT NO:		BY	NO	DATE	DESCRIPTION
		GF	001		DEV. CONCEPT PLAN (30%)
	DATE:	GF	002	6/20/16	DEV. SITE PLAN
DESIGNED:					
DRAFTED:					
CHECKED:					
APPROVED:					

Gannett Fleming

COMMONWEALTH OF VIRGINIA
MARTHA JEAN AVERSO
Lic. No. 17470
PROFESSIONAL ENGINEER
6-20-16

VRE

VIRGINIA RAILWAY EXPRESS

ALEXANDRIA
PEDESTRIAN TUNNEL

DISCIPLINE: CIVIL DETAILS

DRAWING NO: C-502

LIST NO:

SCALE: NONE

DATE ISSUED: 6/20/16

C:\pwworking\gfpa01\smello\d0593522\DSP-58349 C-502DET.dwg, 6/21/2016 9:15:59 AM, smello

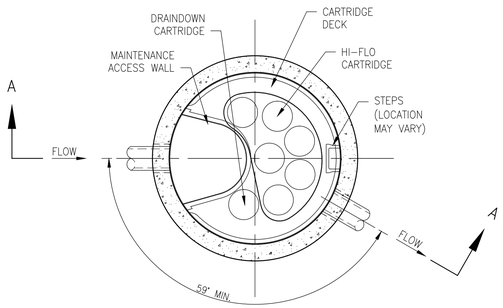

PLAN VIEW

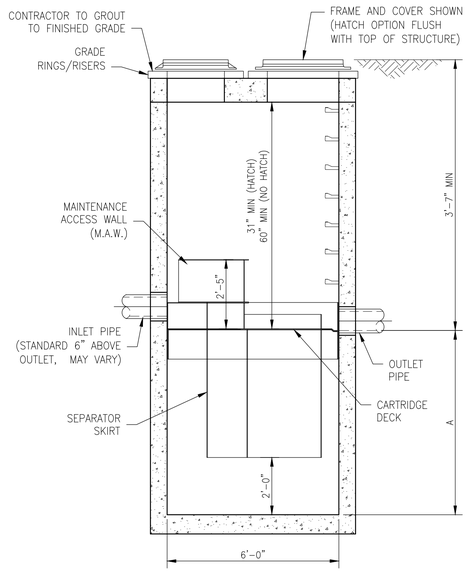

SECTION A–A

JF JELLYFISH FILTER
SCALE: NOT TO SCALE

JELLYFISH DESIGN NOTES

JELLYFISH TREATMENT CAPACITY IS A FUNCTION OF THE CARTRIDGE SELECTION AND THE NUMBER OF CARTRIDGES. THE STANDARD MANHOLE STYLE IS SHOWN. ø72" MANHOLE JELLYFISH PEAK TREATMENT CAPACITY IS 1.16 CFS. IF THE SITE CONDITIONS EXCEED 1.16 CFS AN UPSTREAM BYPASS STRUCTURE IS REQUIRED.

CARTRIDGE SELECTION

CARTRIDGE DEPTH	54"	40"	27"	15"
OUTLET INVERT TO STRUCTURE INVERT (A)	6'–5"	5'–3"	4'–2"	3'–2"
FLOW RATE HIGH–FLO / DRAINDOWN (cfs)(per cart)	0.18 / 0.09	0.13 / 0.065	0.09 / 0.045	0.05 / 0.025
MAX. CARTS HIGH–FLO / DRAINDOWN	6 / 1			

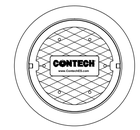

FRAME AND COVER
(DIAMETER VARIES)
N.T.S.

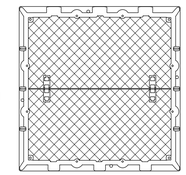

HATCH
(48" x 48" CAST INTO SLAB)
N.T.S.

SITE SPECIFIC DATA REQUIREMENTS

STRUCTURE ID	*
WATER QUALITY FLOW RATE (cfs)	*
PEAK FLOW RATE (cfs)	*
RETURN PERIOD OF PEAK FLOW (yrs)	*
# OF CARTRIDGES REQUIRED (HF / DD)	*/*
CARTRIDGE SIZE	*

PIPE DATA:	I.E.	MATERIAL	DIAMETER
INLET PIPE #1	*	*	*
INLET PIPE #2	*	*	*
OUTLET PIPE	*	*	*

RIM ELEVATION	*

ANTI–FLOTATION BALLAST	WIDTH	HEIGHT
	*	*

NOTES/SPECIAL REQUIREMENTS:

* PER ENGINEER OF RECORD

GENERAL NOTES:

1. CONTECH TO PROVIDE ALL MATERIALS UNLESS NOTED OTHERWISE.
2. FOR SITE SPECIFIC DRAWINGS WITH DETAILED STRUCTURE DIMENSIONS AND WEIGHT, PLEASE CONTACT YOUR CONTECH ENGINEERED SOLUTIONS REPRESENTATIVE. www.ContechES.com
3. JELLYFISH WATER QUALITY STRUCTURE SHALL BE IN ACCORDANCE WITH ALL DESIGN DATA AND INFORMATION CONTAINED IN THIS DRAWING. CONTRACTOR TO CONFIRM STRUCTURE MEETS REQUIREMENTS OF PROJECT.
4. STRUCTURE SHALL MEET AASHTO HS–20 OR PER APPROVING JURISDICTION REQUIREMENTS, WHICHEVER IS MORE STRINGENT, ASSUMING EARTH COVER OF 0' – 3', AND GROUNDWATER ELEVATION AT, OR BELOW, THE OUTLET PIPE INVERT ELEVATION. ENGINEER OF RECORD TO CONFIRM ACTUAL GROUNDWATER ELEVATION. CASTINGS SHALL MEET AASHTO M306 LOAD RATING AND BE CAST WITH THE CONTECH LOGO.
5. STRUCTURE SHALL BE PRECAST CONCRETE CONFORMING TO ASTM C–478 AND AASHTO LOAD FACTOR DESIGN METHOD.
6. NO PRODUCT SUBSTITUTIONS SHALL BE ACCEPTED UNLESS SUBMITTED 10 DAYS PRIOR TO PROJECT BID DATE, OR AS DIRECTED BY THE ENGINEER OF RECORD.

INSTALLATION NOTES

A. ANY SUB–BASE, BACKFILL DEPTH, AND/OR ANTI–FLOTATION PROVISIONS ARE SITE–SPECIFIC DESIGN CONSIDERATIONS AND SHALL BE SPECIFIED BY ENGINEER OF RECORD.

B. CONTRACTOR TO PROVIDE EQUIPMENT WITH SUFFICIENT LIFTING AND REACH CAPACITY TO LIFT AND SET THE STRUCTURE (LIFTING CLUTCHES PROVIDED)

C. CONTRACTOR WILL INSTALL AND LEVEL THE STRUCTURE, SEALING THE JOINTS, LINE ENTRY AND EXIT POINTS (NON–SHRINK GROUT WITH APPROVED WATERSTOP OR FLEXIBLE BOOT)

D. CONTRACTOR TO TAKE APPROPRIATE MEASURES TO PROTECT CARTRIDGES FROM CONSTRUCTION–RELATED EROSION RUNOFF.

E. CARTRIDGE INSTALLATION, BY CONTECH, SHALL OCCUR ONLY AFTER SITE HAS BEEN STABILIZED AND THE JELLYFISH UNIT IS CLEAN AND FREE OF DEBRIS. CONTACT CONTECH TO COORDINATE CARTRIDGE INSTALLATION WITH SITE STABILIZATION AT (866) 740–3318.

60% SUBMITTAL

CONTRACT NO:	
PROJECT NO:	
	DATE:
DESIGNED:	
DRAFTED:	
CHECKED:	
APPROVED:	

REVISIONS

BY	NO	DATE	DESCRIPTION
GF	001		DEV. CONCEPT PLAN (30%)
GF	002	6/20/16	DEV. SITE PLAN

Gannett Fleming

COMMONWEALTH OF VIRGINIA
MARTHA JEAN AVERSO
Lic. No. 17470
PROFESSIONAL ENGINEER
6-20-16

VRE

VIRGINIA RAILWAY EXPRESS

ALEXANDRIA
PEDESTRIAN TUNNEL

DISCIPLINE:
CIVIL
STORMWATER MANAGEMENT
DETAILS

SCALE: AS SHOWN

DATE ISSUED: 6/20/16

DRAWING NO: C-503

LIST NO:

C:\pwworking\gfpv01\smello\d0593522\DSP-58349 C-503DET.dwg, 6/21/2016 9:18:07 AM, smello

EROSION AND SEDIMENT CONTROL NARRATIVE

SITE DESCRIPTION:

ALEXANDRIA UNION STATION IS OWNED BY THE CITY OF ALEXANDRIA AND CURRENTLY PROVIDES PASSENGER INTERVITY TRAVEL SERVICE FROM THE NATIONAL RAILROAD PASSENGER CORPORATION (AMTRAK) AS WELL AS REGIONAL COMMUTER SERVICE FROM VIRGINIA RAILWAY EXPRESS (VRE). THE SITE IS BOUND BY CSX TRANSPORTATION (CSXT) AND WASHINGTON METROPOLITAN AREA TRANSIT AUTHORITY'S (WMATA) KING STREET – OLD TOWN STATION TO THE SOUTH.

PROJECT IMPROVEMENTS:

THE MAIN PROJECT INVOLVES CONSTRUCTION OF A NEW PEDESTRIAN TUNNEL LINKING THE VRE UNION STATION (110 CALLAHAN DRIVE) WITH THE WMATA KING STREET STATION (1900 KING STREET) IN ALEXANDRIA, VA. A SEVERAL CAST IN PLACE MASONRY FACED RETAINING WALLS WILL BE INSTALLED FOR EARTH RETENTION ON THE EXISTING EMBANKMENT AND ALONG THE EXISTING SIDEWALK FOR CONSTRUCTION OF PROPOSED IMPROVEMENTS. THE EAST EDGE OF THE PLATFORM WILL BE WIDENED AND THE SOUTHERN END OF THE PLATFORM WILL BE EXTENDED. A MINOR GRADING OF BALLASTED AREAS ALONG THE PLATFORM EDGE WILL BE REQUIRED. A NEW UNDERDRAIN WILL BE CONSTRUCTED FOR THE DRAINAGE UNDER THE EAST PLATFORM WIDENING AREA. SOME SECTIONS OF CURRENT TUNNEL ENTRANCE SIDEWALK AND THE WEST PLATFORM PAVING WILL REQUIRE REMOVAL DURING THE CONSTRUCTION OF THE OPEN CUT EXCAVATION FOR TUNNEL AND RETAINING WALL CONSTRUCTION ON THE WEST SIDE OF THE TUNNEL (CITY OF ALEXANDRIA PROPERTY). AT THE COMPLETION OF TUNNEL CONSTRUCTION, THE SIDEWALK AND PLATFORM AREA WILL BE REPAIRED WITH REINFORCED CONCRETE HARDSCAPE PAVING TO MATCH EXISTING. A NEW SANITARY SEWER PIPE AND SOME UTILITIES RE-CONSTRUCTION WILL BE CARRIED OUT AT THE TUNNEL ENTRANCE (UNION STATION). AN OPEN CUT EXCAVATION WILL BE DONE FOR AN EXISTING UNDERGROUND COMMUNICATION INFRASTRUCTURE AT KING STREET STATION.

SOILS: SEE SOILS MAP (THIS SHEET.)

CRITICAL AREAS: NO CRITICAL AREAS HAVE BEEN IDENTIFIED WITHIN THE LIMITS OF THIS PROJECT.

EROSION AND SEDIMENT CONTROL MEASURES: UNLESS OTHERWISE DIRECTED, ALL VEGETATIVE AND STRUCTURAL EROSION AND SEDIMENT CONTROL PRACTICES SHALL BE CONSTRUCTED AND MAINTAINED IN ACCORDANCE WITH THE MOST CURRENT MINIMUM STANDARDS AND SPECIFICATIONS OF THE VIRGINIA EROSION AND SEDIMENT CONTROL HANDBOOK. ALL NECESSARY EROSION AND SEDIMENT CONTROL MEASURES SHALL BE IN PLACE PRIOR TO BEGINNING CONSTRUCTION.

STRUCTURAL PRACTICES:

1. SILT FENCE BARRIER (3.05) – SILT FENCE SEDIMENT BARRIERS SHALL BE INSTALLED TO FILTER SEDIMENT-LADEN RUNOFF AS SHOWN ON THE E&SC PLAN.
2. STORM DRAIN INLET PROTECTION (3.07) – ALL STORM SEWER INLETS SHALL BE PROTECTED DURING CONSTRUCTION. SEDIMENT-LADEN WATER SHALL BE FILTERED BEFORE ENTERING THE STORM SEWER INLETS.
3. PERMANENT SEEDING (3.32) – PERENNIAL VEGETATIVE COVER SHALL BE ESTABLISHED ON DISTURBED AREAS BY PLANTING SEED TO REDUCE EROSION, DECREASE SEDIMENT YIELD, AND TO PERMANENTLY STABILIZE DISTURBED AREAS. SELECTION OF THE SEED MIXTURE WILL DEPEND ON THE TIME OF YEAR IT IS APPLIED.

PERMANENT STABILIZATION: PERMANENT STABILIZATION SHALL BE DONE IN ACCORDANCE WITH THE VIRGINIA EROSION AND SEDIMENT CONTROL HANDBOOK (SEE THIS SHEET FOR SEED MIXTURES). IN ALL SEEDING OPERATIONS, SEED, FERTILIZER AND LIME WILL BE APPLIED PRIOR TO MULCHING. ALL AREAS DISTURBED BY CONSTRUCTION SHALL BE STABILIZED WITH PERMANENT SEEDING IMMEDIATELY FOLLOWING FINISH GRADING. EROSION AND SEDIMENT CONTROL MEASURES SHALL REMAIN IN PLACE UNTIL THE GRASS IS ESTABLISHED.

STORMWATER MANAGEMENT:

MAINTENANCE: IN GENERAL, ALL EROSION AND SEDIMENT CONTROL MEASURES SHALL BE CHECKED DAILY AND AFTER EACH SIGNIFICANT RAINFALL.

1. TEMPORARY SEEDING OR OTHER STABILIZATION WILL FOLLOW IMMEDIATELY AFTER GRADING.
2. THE JOB SUPERINTENDENT SHALL BE RESPONSIBLE FOR THE INSTALLATION, DAILY INSPECTION, AND MAINTENANCE OF ALL EROSION AND SEDIMENT CONTROL PRACTICES.

NOTES:

1. AN EROSION & SEDIMENT CONTROL CONTRACTOR CERTIFICATION (ESCCC) IS REQUIRED FOR ALL LAND DISTURBING ACTIVITIES OCCURRING WITHIN THE STATE'S RIGHT OF WAY.
2. THE COUNTY IS RESPONSIBLE FOR COMPLYING WITH APPLICABLE LOCAL, STATE, AND FEDERAL ENVIRONMENTAL LAWS AND REGULATIONS, INCLUDING ACQUIRING CLEARANCES/AUTHORIZATIONS FROM APPROPRIATE REGULATORY AGENCIES.
3. ALL E&S CONTROLS SHALL BE REMOVED WITHIN 30 DAYS AFTER PROJECT IS STABILIZED.

SOIL ID NUMBERS	SOIL SERIES NAME	FOUNDATION SUPPORT	SOIL DRAINAGE	EROSION POTENTIAL
71C	KINGSTOWNE- SASSAFRAS MARUMSCO COMPLEX		MODERATELY WELL DRAINED	MODERATE
66	KINGSTOWNE- SANDY CLAY LOAM		WELL DRAINED	SEVERE
95	URBAN LAND		NONE SPECIFIED	NONE SPECIFIED
98	URBAN LAND- GRIST MILL		NONE SPECIFIED	NONE SPECIFIED

IS THE SITE LOCATED WITHIN NATURALLY OCCURRING ASBESTOS SOILS?

YES ☐ NO ☒

AREAS THAT MAY CONTAIN NATURALLY OCCURRING ASBESTOS SOILS ARE LOCATED ON THE ORANGE SOILS TAX MAP GRIDS ON THE COUNTY WEBSITE. SPECIAL PRECAUTIONS REGARDING THESE SOILS OR FILL ORIGINATING FROM THESE SOILS ARE REQUIRED BY THE OCCUPATIONAL SAFETY AND HEALTH REGULATIONS ENFORCED BY THE VIRGINIA DEPARTMENT OF LABOR AND INDUSTRY AND SPECIAL GUIDANCE HAS BEEN ISSUED BY THE U.S. ENVIRONMNETAL PROTECTION AGENCY.

LIME APPLICATION RATE: 2 TONS PER ACRE

FERTILIZER APPLICATION RATE: 300 LBS/ACRE (15-30-15)

EROSION CONTROL MULCH RATE: 1,210 SY PER 100 FEET

SOIL MAP

SITE SPECIFIC SEEDING MIXTURES FOR PIEDMONT AREA

PS

MINIMUM CARE LAWN	TOTAL LBS PER ACRE
COMMERCIAL OR RESIDENTIAL	175-200 LBS
-KENTUCKY 31 OR TURF-TYPE TALL FESCUE	95-100%
-IMPROVED PERENNIAL RYEGRASS	0-5%
-KENTUCKY BLUEGRASS	0-5%
GENERAL SLOPE (3:1 OR LESS)	
-KENTUCKY 31 FESCUE	128 LBS
-RED TOP GRASS	2 LBS
-SEASONAL NURSE CROP*	20 LBS
	150 LBS
LOW MAINTENANCE SLOPE (STEEPER THAN 3:1)	
-KENTUCKY 31 FESCUE	108 LBS
-RED TOP GRASS	2 LBS
-SEASONAL NURSE CROP*	20 LBS
-CROWNVETCH**	20 LBS
	150 LBS

*USE SEASONAL NURSE CROP IN ACCORDANCE WITH SEEDING DATES AS STATED BELOW

FEBRUARY 16TH THROUGH APRIL	ANNUAL RYE
MAY 1ST THROUGH AUGUST 15TH	FOXTAIL MILLET
AUGUST 16 THROUGH OCTOBER	ANNUAL RYE
NOVEMBER THROUGH FEBRUARY 15TH	WINTER RYE

**SUBSTITUTE SERICEA LESPEDEZA FOR CROWNVETCH EAST OF FARMVILLE, VA (MAY THROUGH SEPTEMBER USE HULLED SERICEA, ALL OTHER PERIODS, USE UNHULLED SERICEA). IF FLATPEA IS USED IN LIEU OF CORNVETCH, INCREASE RATE TO 30LBS/ACRE. ALL LEGUME SEED MUST BE PROPERLY INOCULATED. WEEPING LOVEGRASS MAY BE ADDED TO ANY SLOPE OR LOW-MAINTENANCE MIX DURING WARMER SEEDING PERIODS; ADD 10-20 LBS/ACRE IN MIXES.

APPROVED
SPECIAL USE PERMIT NO.
DEPARTMENT OF PLANNING & ZONING

DIRECTOR DATE

DEPARTMENT OF TRANSPORTATION & ENVIRONMENTAL SERVICES
SITE PLAN NO. DSP2011-0027

DIRECTOR DATE

CHAIRMAN, PLANNING COMMISSION DATE

DATE RECORDED

INSTRUMENT NO. DEED BOOK NO. PAGE NO.

DATUM:
(HZ) NAD 83
(VT) NAVD 88

60% SUBMITTAL

CONTRACT NO:		REVISIONS			
PROJECT NO:		BY	NO	DATE	DESCRIPTION
	DATE:	GF	001		DEV. CONCEPT PLAN (30%)
		GF	002	6/20/16	DEV. SITE PLAN
DESIGNED:					
DRAFTED:					
CHECKED:					
APPROVED:					

Gannett Fleming

COMMONWEALTH OF VIRGINIA
MARTHA JEAN AVERSO
Lic. No. 17470
PROFESSIONAL ENGINEER
6-20-16

VRE

VIRGINIA RAILWAY EXPRESS

ALEXANDRIA
PEDESTRIAN TUNNEL

DISCIPLINE:
CIVIL
EROSION AND SEDIMENT
CONTROL NOTES AND NARRATIVE

SCALE: NONE

DATE ISSUED: 6/20/16

DRAWING NO: C-504

LIST NO:

C:\pwworking\gfpa01\smello\d0593522\DSP-58349 C-504ESN.dwg, 6/21/2016 9:21:36 AM, smello

4VAC50-30-40 EROSION AND SEDIMENT CONTROL MINIMUM STANDARDS

MS-1:PERMANENT OR TEMPORARY SOIL STABILIZATION SHALL BE APPLIED TO DENUDED AREAS WITHIN SEVEN DAYS AFTER FINAL GRADE IS REACHED ON ANY PORTION OF THE SITE. TEMPORARY SOIL STABILIZATION SHALL BE APPLIED WITHIN SEVEN DAYS TO DENUDED AREAS THAT MAY NOT BE AT FINAL GRADE BUT WILL REMAIN DORMANT FOR LONGER THAN 30 DAYS. PERMANENT STABILIZATION SHALL BE APPLIED TO AREAS THAT ARE TO BE LEFT DORMANT FOR MORE THAN ONE YEAR.

MS-2: DURING CONSTRUCTION OF THE PROJECT, SOIL STOCK PILES AND BORROW AREAS SHALL BE STABILIZED OR PROTECTED WITH SEDIMENT TRAPPING MEASURES. THE APPLICANT IS RESPONSIBLE FOR THE TEMPORARY PROTECTION AND PERMANENT STABILIZATION OF ALL SOIL STOCKPILES ON SITE AS WELL AS BORROW AREAS AND SOIL INTENTIONALLY TRANSPORTED FROM THE PROJECT SITE.

MS-3: A PERMANENT VEGETATIVE COVER SHALL BE ESTABLISHED ON DENUDED AREAS NOT OTHERWISE PERMANENTLY STABILIZED. PERMANENT VEGETATION SHALL NOT BE CONSIDERED ESTABLISHED UNTIL A GROUND COVER IS ACHIEVED THAT IS UNIFORM, MATURE ENOUGH TO SURVIVE AND WILL INHIBIT EROSION.

MS-4: SEDIMENT BASINS AND TRAPS, PERIMETER DIKES, SEDIMENT BARRIERS AND OTHER MEASURES INTENDED TO TRAP SEDIMENT SHALL BE CONSTRUCTED AS A FIRST STEP IN ANY LAND-DISTURBING ACTIVITY AND SHALL BE MADE FUNCTIONAL BEFORE UPSLOPE LAND DISTURBANCE TAKES PLACE.

MS-5: STABILIZATION MEASURES SHALL BE APPLIED TO EARTHEN STRUCTURES SUCH AS DAMS, DIKES AND DIVERSIONS IMMEDIATELY AFTER INSTALLATION.

MS-6: SEDIMENT TRAPS AND SEDIMENT BASINS SHALL BE DESIGNED AND CONSTRUCTED BASED UPON THE TOTAL DRAINAGE AREA TO BE SERVED BY THE TRAP OR BASIN.

A. THE MINIMUM STORAGE CAPACITY OF A SEDIMENT TRAP SHALL BE 134 CUBIC YARDS PER ACRE OF DRAINAGE AREA AND THE TRAP SHALL ONLY CONTROL DRAINAGE AREAS LESS THAN THREE ACRES.

B. SURFACE RUNOFF FROM DISTURBED AREAS THAT IS COMPRISED OF FLOW FROM DRAINAGE AREAS GREATER THAN OR EQUAL TO THREE ACRES SHALL BE CONTROLLED BY A SEDIMENT BASIN. THE MINIMUM STORAGE CAPACITY OF A SEDIMENT BASIN SHALL BE 134 CUBIC YARDS PER ACRE OF DRAINAGE AREA. THE OUTFALL SYSTEM SHALL, AT A MINIMUM, MAINTAIN THE STRUCTURAL INTEGRITY OF THE BASIN DURING A 25-YEAR STORM OF 24-HOUR DURATION. RUNOFF COEFFICIENTS USED IN RUNOFF CALCULATIONS SHALL CORRESPOND TO A BARE EARTH CONDITION OR THOSE CONDITIONS EXPECTED TO EXIST WHILE THE SEDIMENT BASIN IS UTILIZED.

MS-7: CUT AND FILL SLOPES SHALL BE DESIGNED AND CONSTRUCTED IN A MANNER THAT WILL MINIMIZE EROSION. SLOPES THAT ARE FOUND TO BE ERODING EXCESSIVELY WITHIN ONE YEAR OF PERMANENT STABILIZATION SHALL BE PROVIDED WITH ADDITIONAL SLOPE STABILIZING MEASURES UNTIL THE PROBLEM IS CORRECTED.

MS-8: CONCENTRATED RUNOFF SHALL NOT FLOW DOWN CUT OR FILL SLOPES UNLESS CONTAINED WITHIN AN ADEQUATE TEMPORARY OR PERMANENT CHANNEL, FLUME OR SLOPE DRAIN STRUCTURE.

MS-9: WHENEVER WATER SEEPS FROM A SLOPE FACE, ADEQUATE DRAINAGE OR OTHER PROTECTION SHALL BE PROVIDED.

MS-10: ALL STORM SEWER INLETS THAT ARE MADE OPERABLE DURING CONSTRUCTION SHALL BE PROTECTED SO THAT SEDIMENT-LADEN WATER CANNOT ENTER THE CONVEYANCE SYSTEM WITHOUT FIRST BEING FILTERED OR OTHERWISE TREATED TO REMOVE SEDIMENT.

MS-11: BEFORE NEWLY CONSTRUCTED STORMWATER CONVEYANCE CHANNELS OR PIPES ARE MADE OPERATIONAL, ADEQUATE OUTLET PROTECTION AND ANY REQUIRED TEMPORARY OR PERMANENT CHANNEL LINING SHALL BE INSTALLED IN BOTH THE CONVEYANCE CHANNEL AND RECEIVING CHANNEL.

MS-12: WHEN WORK IN A LIVE WATERCOURSE IS PERFORMED, PRECAUTIONS SHALL BE TAKEN TO MINIMIZE ENCROACHMENT, CONTROL SEDIMENT TRANSPORT AND STABILIZE THE WORK AREA TO THE GREATEST EXTENT POSSIBLE DURING CONSTRUCTION. NONERODIBLE MATERIAL SHALL BE USED FOR THE CONSTRUCTION OF CAUSEWAYS AND COFFERDAMS. EARTHEN FILL MAY BE USED FOR THESE STRUCTURES IF ARMORED BY NONERODIBLE COVER MATERIALS.

MS-13: WHEN A LIVE WATERCOURSE MUST BE CROSSED BY CONSTRUCTION VEHICLES MORE THAN TWICE IN ANY SIX-MONTH PERIOD, A TEMPORARY VEHICULAR STREAM CROSSING CONSTRUCTED OF NONERODIBLE MATERIAL SHALL BE PROVIDED.

MS-14: ALL APPLICABLE FEDERAL, STATE AND LOCAL CHAPTERS PERTAINING TO WORKING IN OR CROSSING LIVE WATERCOURSES SHALL BE MET.

MS-15: THE BED AND BANKS OF A WATERCOURSE SHALL BE STABILIZED IMMEDIATELY AFTER WORK IN THE WATERCOURSE IS COMPLETED.

MS-16: UNDERGROUND UTILITY LINES SHALL BE INSTALLED IN ACCORDANCE WITH THE FOLLOWING STANDARDS IN ADDITION TO OTHER APPLICABLE CRITERIA:

A. NO MORE THAN 500 LINEAR FEET OF TRENCH MAY BE OPENED AT ONE TIME.

B. EXCAVATED MATERIAL SHALL BE PLACED ON THE UPHILL SIDE OF TRENCHES.

C. EFFLUENT FROM DEWATERING OPERATIONS SHALL BE FILTERED OR PASSED THROUGH AN APPROVED SEDIMENT TRAPPING DEVICE, OR BOTH, AND DISCHARGED IN A MANNER THAT DOES NOT ADVERSELY AFFECT FLOWING STREAMS OR OFF-SITE PROPERTY.

D. MATERIAL USED FOR BACKFILLING TRENCHES SHALL BE PROPERLY COMPACTED IN ORDER TO MINIMIZE EROSION AND PROMOTE STABILIZATION.

E. RESTABILIZATION SHALL BE ACCOMPLISHED IN ACCORDANCE WITH THIS CHAPTER.

F. APPLICABLE SAFETY CHAPTERS SHALL BE COMPLIED WITH.

4VAC50-30-40 EROSION AND SEDIMENT CONTROL MINIMUM STANDARDS (CONT'S)

MS-17: WHERE CONSTRUCTION VEHICLE ACCESS ROUTES INTERSECT PAVED OR PUBLIC ROADS, PROVISIONS SHALL BE MADE TO MINIMIZE THE TRANSPORT OF SEDIMENT BY VEHICULAR TRACKING ONTO THE PAVED SURFACE. WHERE SEDIMENT IS TRANSPORTED ONTO A PAVED OR PUBLIC ROAD SURFACE, THE ROAD SURFACE SHALL BE CLEANED THOROUGHLY AT THE END OF EACH DAY. SEDIMENT SHALL BE REMOVED FROM THE ROADS BY SHOVELING OR SWEEPING AND TRANSPORTED TO A SEDIMENT CONTROL DISPOSAL AREA. STREET WASHING SHALL BE ALLOWED ONLY AFTER SEDIMENT IS REMOVED IN THIS MANNER. THIS PROVISION SHALL APPLY TO INDIVIDUAL DEVELOPMENT LOTS AS WELL AS TO LARGER LAND-DISTURBING ACTIVITIES.

MS-18: ALL TEMPORARY EROSION AND SEDIMENT CONTROL MEASURES SHALL BE REMOVED WITHIN 30 DAYS AFTER FINAL SITE STABILIZATION OR AFTER THE TEMPORARY MEASURES ARE NO LONGER NEEDED, UNLESS OTHERWISE AUTHORIZED BY THE LOCAL PROGRAM AUTHORITY. TRAPPED SEDIMENT AND THE DISTURBED SOIL AREAS RESULTING FROM THE DISPOSITION OF TEMPORARY MEASURES SHALL BE PERMANENTLY STABILIZED TO PREVENT FURTHER EROSION AND SEDIMENTATION.

MS-19: PROPERTIES AND WATERWAYS DOWNSTREAM FROM DEVELOPMENT SITES SHALL BE PROTECTED FROM SEDIMENT DEPOSITION, EROSION AND DAMAGE DUE TO INCREASES IN VOLUME, VELOCITY AND PEAK FLOW RATE OF STORMWATER RUNOFF FOR THE STATED FREQUENCY STORM OF 24-HOUR DURATION IN ACCORDANCE WITH THE FOLLOWING STANDARDS AND CRITERIA:

A. CONCENTRATED STORMWATER RUNOFF LEAVING A DEVELOPMENT SITE SHALL BE DISCHARGED DIRECTLY INTO AN ADEQUATE NATURAL OR MAN-MADE RECEIVING CHANNEL, PIPE OR STORM SEWER SYSTEM. FOR THOSE SITES WHERE RUNOFF IS DISCHARGED INTO A PIPE OR PIPE SYSTEM, DOWNSTREAM STABILITY ANALYSES AT THE OUTFALL OF THE PIPE OR PIPE SYSTEM SHALL BE PERFORMED.

B. ADEQUACY OF ALL CHANNELS AND PIPES SHALL BE VERIFIED IN THE FOLLOWING MANNER:

(1) THE APPLICANT SHALL DEMONSTRATE THAT THE TOTAL DRAINAGE AREA TO THE POINT OF ANALYSIS WITHIN THE CHANNEL IS ONE HUNDRED TIMES GREATER THAN THE CONTRIBUTING DRAINAGE AREA OF THE PROJECT IN QUESTION; OR

(2)(A) NATURAL CHANNELS SHALL BE ANALYZED BY THE USE OF A TWO-YEAR STORM TO VERIFY THAT STORMWATER WILL NOT OVERTOP CHANNEL BANKS NOR CAUSE EROSION OF CHANNEL BED OR BANKS.

(B) ALL PREVIOUSLY CONSTRUCTED MAN-MADE CHANNELS SHALL BE ANALYZED BY THE USE OF A TEN-YEAR STORM TO VERIFY THAT STORMWATER WILL NOT OVERTOP ITS BANKS AND BY THE USE OF A TWO-YEAR STORM TO DEMONSTRATE THAT STORMWATER WILL NOT CAUSE EROSION OF CHANNEL BED OR BANKS; AND

(C) PIPES AND STORM SEWER SYSTEMS SHALL BE ANALYZED BY THE USE OF A TEN-YEAR STORM TO VERIFY THAT STORMWATER WILL BE CONTAINED WITHIN THE PIPE OR SYSTEM.

C. IF EXISTING NATURAL RECEIVING CHANNELS OR PREVIOUSLY CONSTRUCTED MAN-MADE CHANNELS OR PIPES ARE NOT ADEQUATE, THE APPLICANT SHALL:

(1) IMPROVE THE CHANNELS TO A CONDITION WHERE A TEN-YEAR STORM WILL NOT OVERTOP THE BANKS AND A TWO-YEAR STORM WILL NOT CAUSE EROSION TO THE CHANNEL BED OR BANKS; OR

(2) IMPROVE THE PIPE OR PIPE SYSTEM TO A CONDITION WHERE THE TEN-YEAR STORM IS CONTAINED WITHIN THE APPURTENANCES;

(3) DEVELOP A SITE DESIGN THAT WILL NOT CAUSE THE PRE-DEVELOPMENT PEAK RUNOFF RATE FROM A TWO-YEAR STORM TO INCREASE WHEN RUNOFF OUTFALLS INTO A NATURAL CHANNEL OR WILL NOT CAUSE THE PRE-DEVELOPMENT PEAK RUNOFF RATE FROM A TEN-YEAR STORM TO INCREASE WHEN RUNOFF OUTFALLS INTO A MAN-MADE CHANNEL; OR

(4) PROVIDE A COMBINATION OF CHANNEL IMPROVEMENT, STORMWATER DETENTION OR OTHER MEASURES WHICH IS SATISFACTORY TO THE PLAN APPROVING AUTHORITY TO PREVENT DOWNSTREAM EROSION.

D. THE APPLICANT SHALL PROVIDE EVIDENCE OF PERMISSION TO MAKE THE IMPROVEMENTS.

E. ALL HYDROLOGIC ANALYSES SHALL BE BASED ON THE EXISTING WATERSHED CHARACTERISTICS AND THE ULTIMATE DEVELOPMENT CONDITION OF THE SUBJECT PROJECT.

F. IF THE APPLICANT CHOOSES AN OPTION THAT INCLUDES STORMWATER DETENTION, HE SHALL OBTAIN APPROVAL FROM THE LOCALITY OF A PLAN FOR MAINTENANCE OF THE DETENTION FACILITIES. THE PLAN SHALL SET FORTH THE MAINTENANCE REQUIREMENTS OF THE FACILITY AND THE PERSON RESPONSIBLE FOR PERFORMING THE MAINTENANCE.

G. OUTFALL FROM A DETENTION FACILITY SHALL BE DISCHARGED TO A RECEIVING CHANNEL, AND ENERGY DISSIPATORS SHALL BE PLACED AT THE OUTFALL OF ALL DETENTION FACILITIES AS NECESSARY TO PROVIDE A STABILIZED TRANSISTION FROM THE FACILITY TO THE RECEIVING CHANNEL.

H. ALL ON-SITE CHANNELS MUST BE VERIFIED TO BE ADEQUATE.

I. INCREASED VOLUMES OF SHEET FLOWS THAT MAY CAUSE EROSION OR SEDIMENTATION ON ADJACENT PROPERTY SHALL BE DIVERTED TO A STABLE OUTLET, ADEQUATE CHANNEL, PIPE OR PIPE SYSTEM, OR TO A DETENTION FACILITY.

4VAC50-30-40 EROSION AND SEDIMENT CONTROL MINIMUM STANDARDS (CONT'S)

J. IN APPLYING THESE STORMWATER MANAGEMENT CRITERIA, INDIVIDUAL LOTS OR PARCELS IN A RESIDENTIAL, COMMERCIAL OR INDUSTRIAL DEVELOPMENT SHALL NOT BE CONSIDERED TO BE SEPARATE DEVELOPMENT PROJECTS. INSTEAD, THE DEVELOPMENT, AS A WHOLE, SHALL BE CONSIDERED TO BE A SINGLE DEVELOPMENT PROJECT. HYDROLOGIC PARAMETERS THAT REFLECT THE ULTIMATE DEVELOPMENT CONDITION SHALL BE USED IN ALL ENGINEERING CALCULATIONS.

K. ALL MEASURES USED TO PROTECT PROPERTIES AND WATERWAYS SHALL BE EMPLOYED IN A MANNER WHICH MINIMIZES IMPACTS ON THE PHYSICAL, CHEMICAL AND BIOLOGICAL INTEGRITY OF RIVERS, STREAMS AND OTHER WATERS OF THE STATE.

APPROVED
SPECIAL USE PERMIT NO.
DEPARTMENT OF PLANNING & ZONING

DIRECTOR DATE

DEPARTMENT OF TRANSPORTATION & ENVIRONMENTAL SERVICES
SITE PLAN NO. DSP2011-0027

DIRECTOR DATE

CHAIRMAN, PLANNING COMMISSION DATE

DATE RECORDED

INSTRUMENT NO. DEED BOOK NO. PAGE NO.

DATUM:
(HZ) NAD 83
(VT) NAVD 88

60% SUBMITTAL

CONTRACT NO:		REVISIONS			
PROJECT NO:		BY	NO	DATE	DESCRIPTION
	DATE:	GF	001		DEV. CONCEPT PLAN (30%)
DESIGNED:		GF	002	6/20/16	DEV. SITE PLAN
DRAFTED:					
CHECKED:					
APPROVED:					

Gannett Fleming

COMMONWEALTH OF VIRGINIA
MARTHA JEAN AVERSO
Lic. No. 17470
PROFESSIONAL ENGINEER
6-20-16

VRE

VIRGINIA RAILWAY EXPRESS

ALEXANDRIA
PEDESTRIAN TUNNEL

DISCIPLINE:
CIVIL
EROSION AND SEDIMENT CONTROL
MINIMUM STANDARDS

DRAWING NO: C-505

SCALE: NONE

DATE ISSUED: 6/20/16

LIST NO:

C:\pwworking\gfpw01\smello\d0593522\DSP-58349 C-505ESN.dwg, 6/21/2016 9:23:47 AM, smello

STONE CONSTRUCTION ENTRANCE

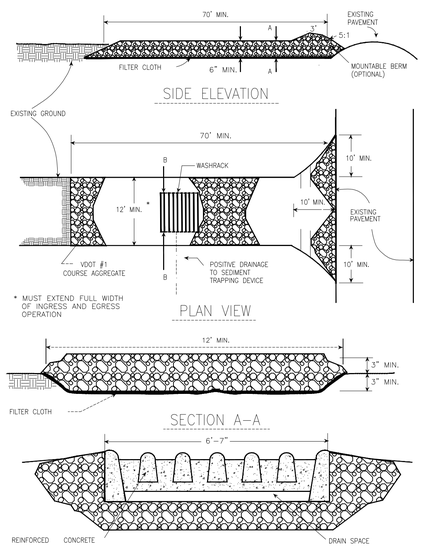

SOURCE: ADAPTED from 1983 Maryland Standards for Soil erosion and Sediment Control, and Va. DSWC

Plate 3.02–1

CONSTRUCTION OF A SILT FENCE (WITHOUT WIRE SUPPORT)

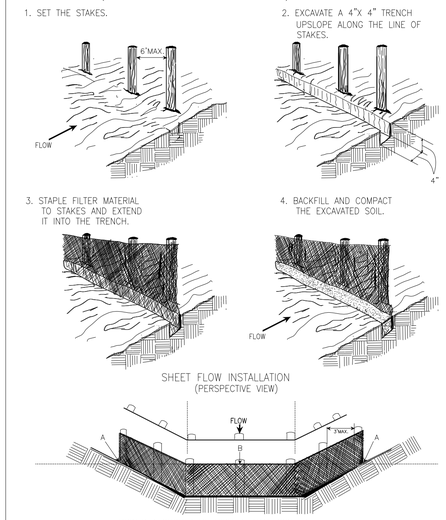

SOURCE: Adapted from Installation of Straw and Fabric Filter Barriers for Sediment Control,VA. DSWC Sherwood and Wyant

PLATE. 3.05–2

GRAVEL CURB INLET SEDIMENT FILTER

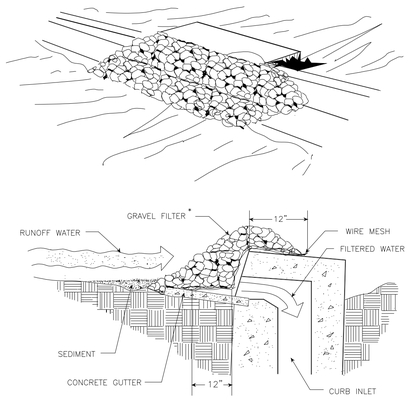

SPECIFIC APPLICATION

THIS METHOD OF INLET PROTECTION IS APPLICABLE AT CURB INLETS WHERE PONDING IN FRONT OF THE STRUCTURE IS NOT LIKELY TO CAUSE INCONVENIENCE OR DAMAGE TO ADJACENT STRUCTURES AND UNPROTECTED AREAS.

* GRAVEL SHALL BE VDOT #3, #357 OR 5 COARSE AGGREGATE.

SOURCE: VA. DSWC

PLATE 3.07–6

BLOCK & GRAVEL CURB INLET SEDIMENT FILTER

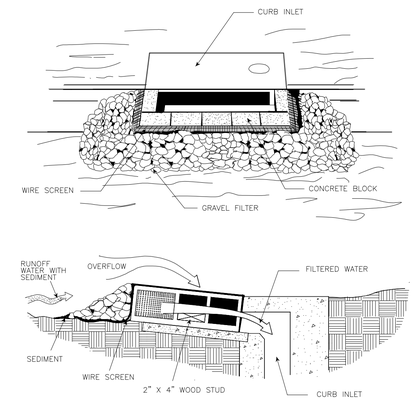

SPECIAL APPLICATION

THIS METHOD OF INLET PROTECTION IS APPLICABLE AT CURB INLETS WHERE AN OVERFLOW CAPABILITY IS NECESSARY TO PREVENT EXCESSIVE PONDING IN FRONT OF THE STRUCTURE.

* GRAVEL SHALL BE VDOT #3, #357 OR #5 COARSE AGGREGATE

SOURCE: VA. DSWC

PLATE 3.07–8

SILT FENCE DROP INLET PROTECTION

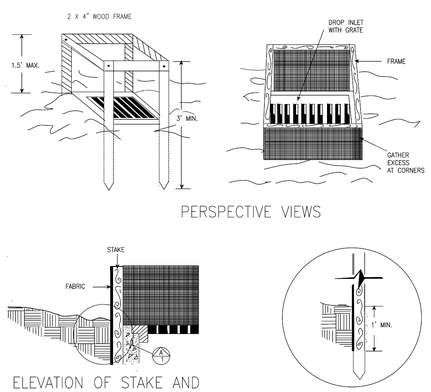

SPECIFIC APPLICATION

THIS METHOD OF INLET PROTECTION IS APPLICABLE WHERE THE INLET DRAINS A RELATIVELY FLAT AREA (SLOPE NO GREATER THAN 5%) WHERE THE INLET SHEET OR OVERLAND FLOWS (NOT EXCEEDING 1 C.F.S.) ARE TYPICAL. THE METHOD SHALL NOT APPLY TO INLETS RECEIVING CONCENTRATED FLOWS, SUCH AS IN STREET OR HIGHWAY MEDIANS.

SOURCE: N.C. Erosion and Sediment Control Planning and Design Manual, 1988

PLATE 3.07–1

EXCAVATED DROP INLET SEDIMENT TRAP

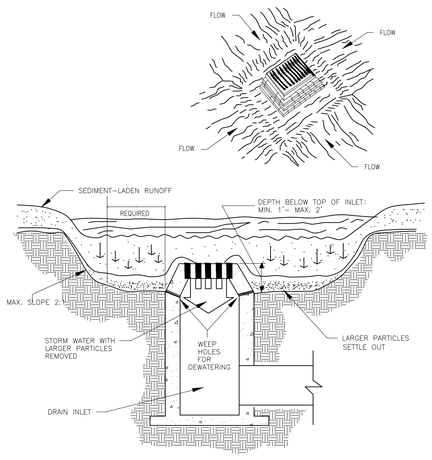

SPECIFIC APPLICATION

THIS METHOD OF INLET PROTECTION IS APPLICABLE WHERE HEAVY FLOWS ARE EXPECTED AND WHERE AN OVERFLOW CAPABILITY AND EASE OF MAINTENANCE ARE DESIRABLE.

SOURCE: MICHIGAN SOIL EROSION AND SEDIMENT CONTROL GUIDEBOOK, 1975, AND USDA–SCS

PLATE 3.07–4

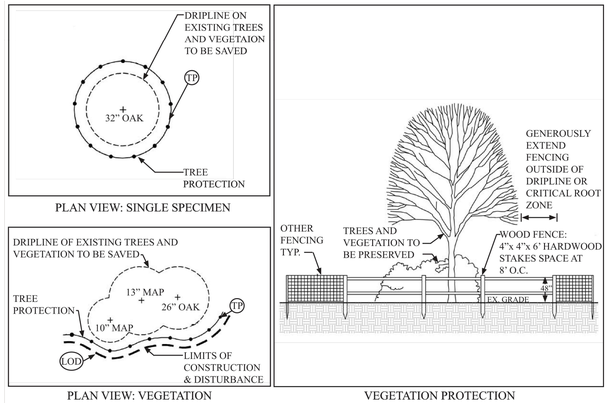

APPROVED
SPECIAL USE PERMIT NO.
DEPARTMENT OF PLANNING & ZONING

DIRECTOR DATE

DEPARTMENT OF TRANSPORTATION & ENVIRONMENTAL SERVICES
SITE PLAN NO. DSP2011-0027

DIRECTOR DATE

CHAIRMAN, PLANNING COMMISSION DATE

DATE RECORDED

INSTRUMENT NO. DEED BOOK NO. PAGE NO.

DATUM:
(HZ) NAD 83
(VT) NAVD 88

60% SUBMITTAL

CONTRACT NO:	
PROJECT NO:	
	DATE:
DESIGNED:	
DRAFTED:	
CHECKED:	
APPROVED:	

REVISIONS

BY	NO	DATE	DESCRIPTION
GF	001		DEV. CONCEPT PLAN (30%)
GF	002	6/20/16	DEV. SITE PLAN

Gannett Fleming

COMMONWEALTH OF VIRGINIA
MARTHA JEAN AVERSO
Lic. No. 17470
PROFESSIONAL ENGINEER
6-20-16

VRE

VIRGINIA RAILWAY EXPRESS

ALEXANDRIA PEDESTRIAN TUNNEL

DISCIPLINE:
CIVIL
EROSION AND SEDIMENT CONTROL DETAILS

DRAWING NO: C-506

LIST NO:

SCALE: NONE

DATE ISSUED: 6/20/16

C:\pwworking\gfpa01\smelio\d0593522\DSP-58349 C-506DET.dwg, 6/21/2016 9:26:36 AM, smelio

SAFETY FENCE

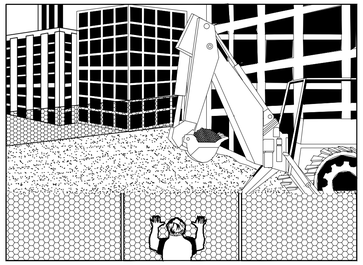

PERSPECTIVE VIEW

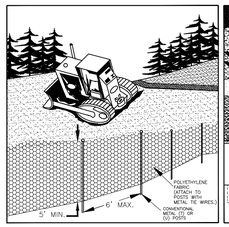

PERSPECTIVE VIEW
PLASTIC FENCE

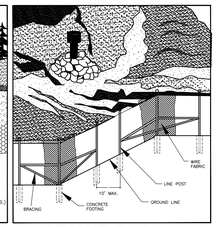

PERSPECTIVE VIEW
METAL FENCE

SOURCE: CONWED PLASTICS
VDOT ROAD AND BRIDGE STANDARDS
VA. DSWC

PLATE. 3.1-1

PORTABLE SEDIMENT TANK

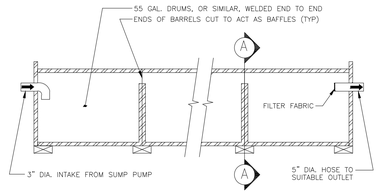

ELEVATION

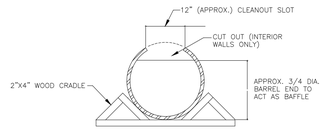

CROSS-SECTION A-A

SOURCE: USDA – SCS

PLATE: 3.26-1

FENCING AND ARMORING

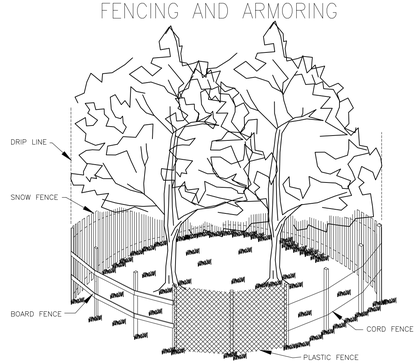

CORRECT METHODS OF TREE FENCING

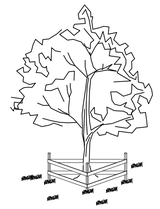

TRIANGULAR BOARD FENCE

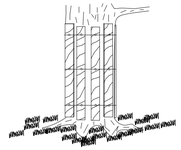

CORRECT TRUNK ARMORING

Source: Va. DSCW

Plate 3.38-2

APPROVED
SPECIAL USE PERMIT NO.
DEPARTMENT OF PLANNING & ZONING

DIRECTOR DATE

DEPARTMENT OF TRANSPORTATION & ENVIRONMENTAL SERVICES
SITE PLAN NO. DSP2011-0027

DIRECTOR DATE

CHAIRMAN, PLANNING COMMISSION DATE

DATE RECORDED

INSTRUMENT NO. DEED BOOK NO. PAGE NO.

DATUM:
(HZ) NAD 83
(VT) NAVD 88

60% SUBMITTAL

CONTRACT NO:		REVISIONS			
PROJECT NO:		BY	NO	DATE	DESCRIPTION
	DATE:	GF	001		DEV. CONCEPT PLAN (30%)
DESIGNED:		GF	002	6/20/16	DEV. SITE PLAN
DRAFTED:					
CHECKED:					
APPROVED:					

Gannett Fleming

COMMONWEALTH OF VIRGINIA
MARTHA JEAN AVERSO
Lic. No. 17470
PROFESSIONAL ENGINEER
6-20-16

VRE

VIRGINIA RAILWAY EXPRESS

ALEXANDRIA
PEDESTRIAN TUNNEL

DISCIPLINE:
CIVIL
EROSION AND SEDIMENT CONTROL DETAILS

DRAWING NO:
C-507

LIST NO:

SCALE: NONE

DATE ISSUED: 6/20/16

C:\pwworking\gfpa01\smello\d0503522\DSP-58349 C-507DET.dwg, 6/21/2016 9:28:57 AM, smello

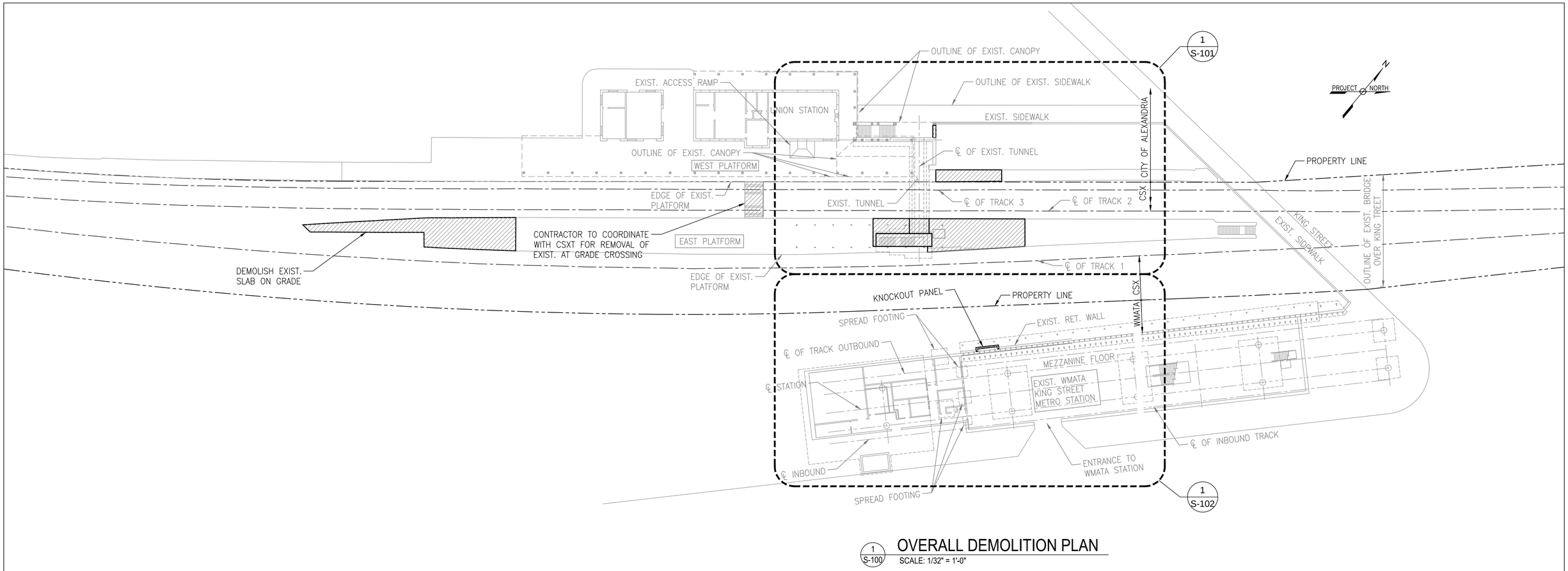

1 S-100 OVERALL DEMOLITION PLAN
SCALE: 1/32" = 1'-0"

NOTES:

1. FOR GENERAL NOTES, REFER TO DRAWINGS S-001 TO S-004.
2. FOR ADDITIONAL NOTES, SEE DRAWING S-101.

LEGEND:

DEMO LIMT

60% SUBMITTAL

CONTRACT NO:		REVISIONS			
PROJECT NO:		BY	NO	DATE	DESCRIPTION
	DATE:				
DESIGNED: IA					
DRAFTED: LTN					
CHECKED: MA/DB					
APPROVED:					

Gannett Fleming

VRE

VIRGINIA RAILWAY EXPRESS

ALEXANDRIA
PEDESTRIAN TUNNEL

DISCIPLINE: STRUCTURAL
OVERALL DEMOLITION PLAN

SCALE: 1/32" = 1'-0"

DATE ISSUED: 5/25/16

DRAWING NO: S-100

LIST NO:

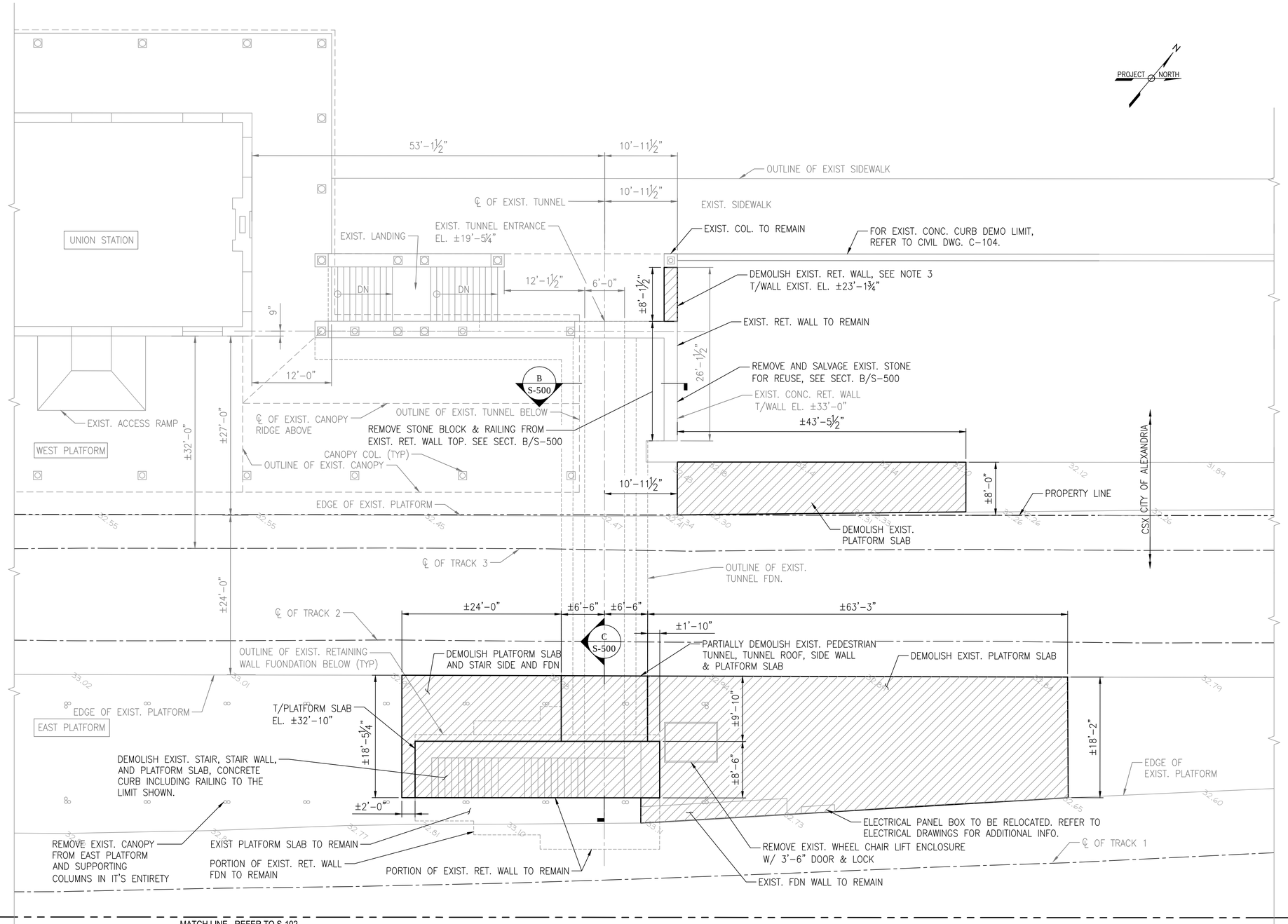

MATCH LINE - REFER TO S-102

1 / S-101 DEMOLITION PART PLAN 1 OF 2

SCALE: 1/8" = 1'-0"

NOTES:

1. FOR GENERAL NOTES, REFER TO DRAWINGS S-001 TO S-004.
2. THE (±) MARKS SHOWN WITH DIMENSION DO NOT INDICATE ANY DEGREE OF PRECISION. THESE DIMENSIONS WILL REQUIRE FIELD VERIFICATION BY THE CONTRACTOR.
3. CAREFULLY DEMOLISH EXISTING RETAINING WALL TO EL. ±18'-9". SALVAGE STONE CLADDIING, SEE ARCHITECTURAL DRAWING FOR ADDITIONAL INFORMATION.
4. FOR LIGHT POST REMOVAL AND REPLACEMENT, REFER TO ARCHITECTURAL AND ELECTRICAL DRAWINGS.
5. FOR ADDITIONAL INFORMATION RELATED TO DEMOLITION, REFER TO CIVIL AND ARCHITECTURAL DRAWING SERIES.

LEGEND:

DEMO LIMT

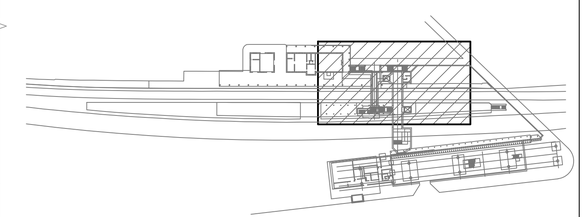

KEY PLAN

SCALE: 1/128" = 1'-0"

60% SUBMITTAL

CONTRACT NO:		REVISIONS			
PROJECT NO:		BY	NO	DATE	DESCRIPTION
	DATE:				
DESIGNED: IA					
DRAFTED: LTN					
CHECKED: MA/DB					
APPROVED:					

Gannett Fleming

VRE

VIRGINIA RAILWAY EXPRESS

ALEXANDRIA
PEDESTRIAN TUNNEL

DISCIPLINE: STRUCTURAL
DEMOLITION PART PLAN 1 OF 2

DRAWING NO: S-101

LIST NO:

SCALE: 1/8" = 1'-0"

DATE ISSUED: 5/25/16

MATCH LINE - REFER TO S-101

PROJECT NORTH

PROPERTY LINE

WMATA CSX

EXIST. RET. WALL ON PILE FOUNDATION (TYP)

EXIST. PILE (TYP)

EXIST. RET. WALL STEM

10'-6"

15'-0"

A S-500

OUTLINE OF RET. WALL FDN

SPREAD FOOTING

KNOCKOUT PANEL

℄ OF OUTBOUND TRACK

DEMOLISH EXIST. CONCRETE KNOCKOUT CLOSURE PANEL

STATION MEZZANINE

EXIST. WMATA KING STREET METRO STATION

℄ STATION

℄ OF INBOUND TRACK

SPREAD FOOTING

ENTRANCE

8

9

NOTES:

1. FOR GENERAL NOTES, REFER TO DRAWINGS S-001 TO S-004.
2. FOR ADDITIONAL NOTES, SEE DRAWING S-101.

LEGEND:

DEMO LIMIT

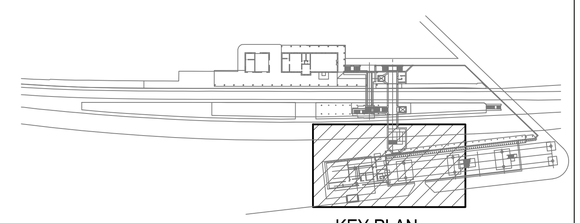

KEY PLAN

SCALE: 1/128" = 1'-0"

1 / S-102 DEMOLITION PART PLAN 2 OF 2

SCALE: 1/8" = 1'-0"

60% SUBMITTAL

CONTRACT NO:	REVISIONS				
PROJECT NO:	BY	NO	DATE	DESCRIPTION	
DATE:					
DESIGNED: IA					
DRAFTED: LTN					
CHECKED: MA/DB					
APPROVED:					

Gannett Fleming

VRE

VIRGINIA RAILWAY EXPRESS

ALEXANDRIA PEDESTRIAN TUNNEL

DISCIPLINE: STRUCTURAL DEMOLITION PART PLAN 2 OF 2

DRAWING NO: S-102

SCALE: 1/8" = 1'-0"

DATE ISSUED: 5/25/16

LIST NO:

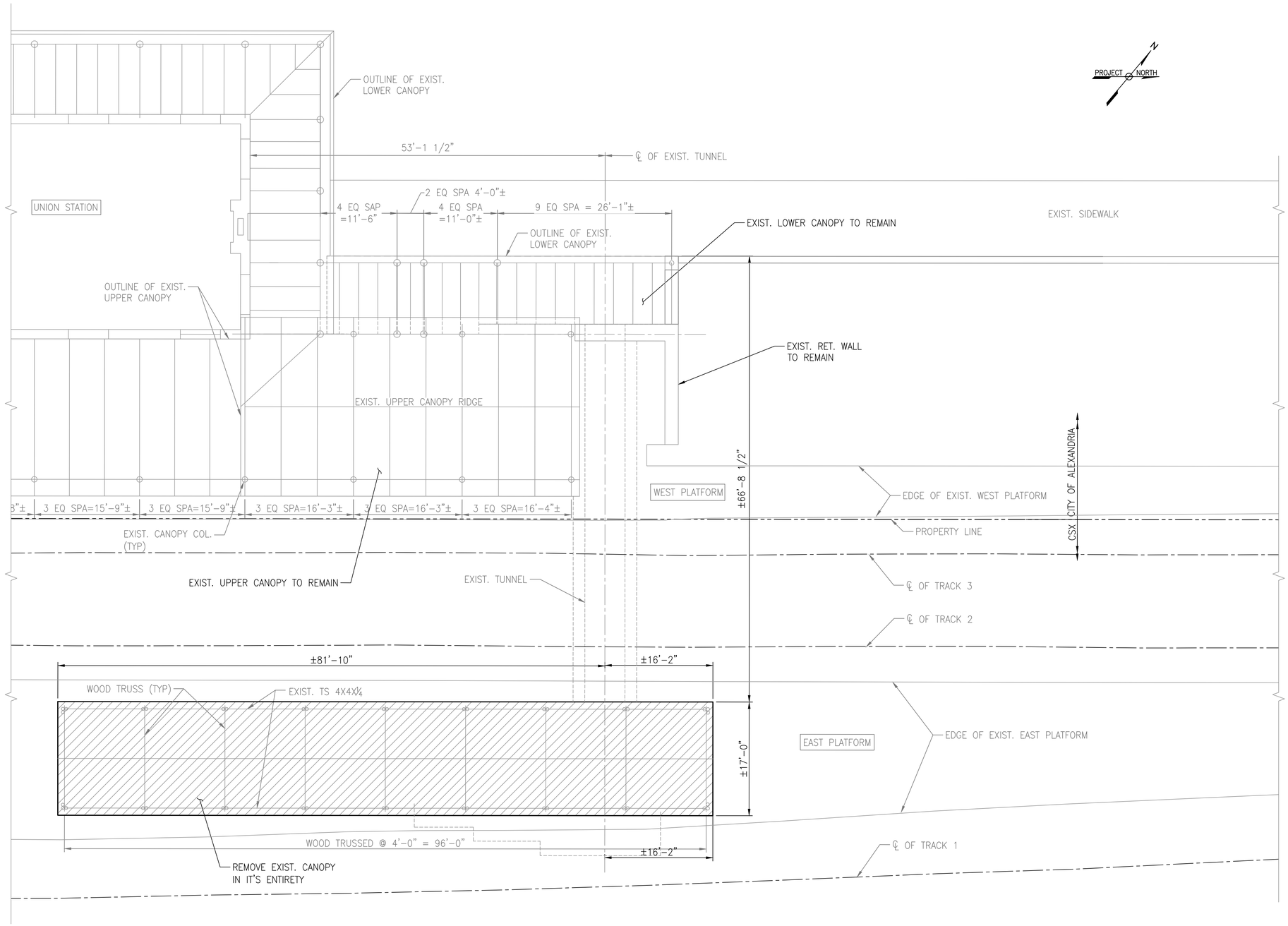

1 S-103 CANOPY DEMOLITION PLAN
SCALE: 1/8" = 1'-0"

NOTES:

1. FOR GENERAL NOTES, REFER TO DRAWINGS S-001 TO S-004.
2. FOR ADDITIONAL NOTES, SEE DRAWING S-101.

LEGEND:

DEMO LIMIT

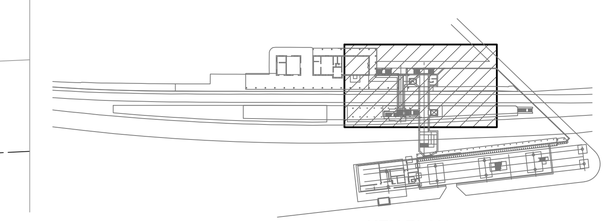

KEY PLAN
SCALE: 1/128" = 1'-0"

60% SUBMITTAL

CONTRACT NO:	REVISIONS				
PROJECT NO:	BY	NO	DATE	DESCRIPTION	
DATE:					
DESIGNED: IA					
DRAFTED: LTN					
CHECKED: MA/DB					
APPROVED:					

Gannett Fleming

VRE

VIRGINIA RAILWAY EXPRESS

ALEXANDRIA PEDESTRIAN TUNNEL

DISCIPLINE: STRUCTURAL CANOPY DEMOLITION PLAN

DRAWING NO: S-103

LIST NO:

SCALE: 1/8" = 1'-0"

DATE ISSUED: 5/25/16

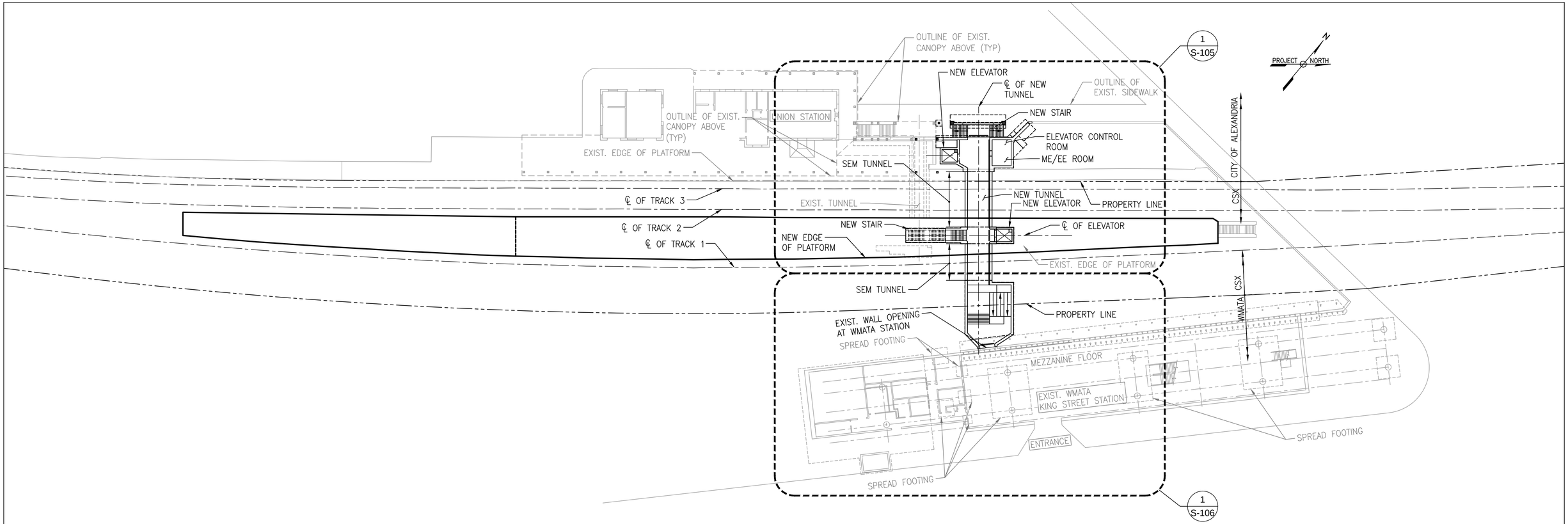

1 S-104 OVERALL STATION PLAN

SCALE: 1/32" = 1'-0"

NOTES:

1. FOR GENERAL NOTES, REFER TO DRAWINGS S-001 TO S-004.
2. FOR ADDITIONAL NOTES, SEE DRAWING S-105.

60% SUBMITTAL

CONTRACT NO:	REVISIONS				
PROJECT NO:	BY	NO	DATE	DESCRIPTION	
DATE:					
DESIGNED: IA					
DRAFTED: LTN					
CHECKED: MA/DB					
APPROVED:					

Gannett Fleming

VRE

VIRGINIA RAILWAY EXPRESS

ALEXANDRIA PEDESTRIAN TUNNEL

DISCIPLINE: STRUCTURAL OVERALL TUNNEL PLAN

DRAWING NO: S-104

LIST NO:

SCALE: 1/32" = 1'-=0"

DATE ISSUED: 5/25/16

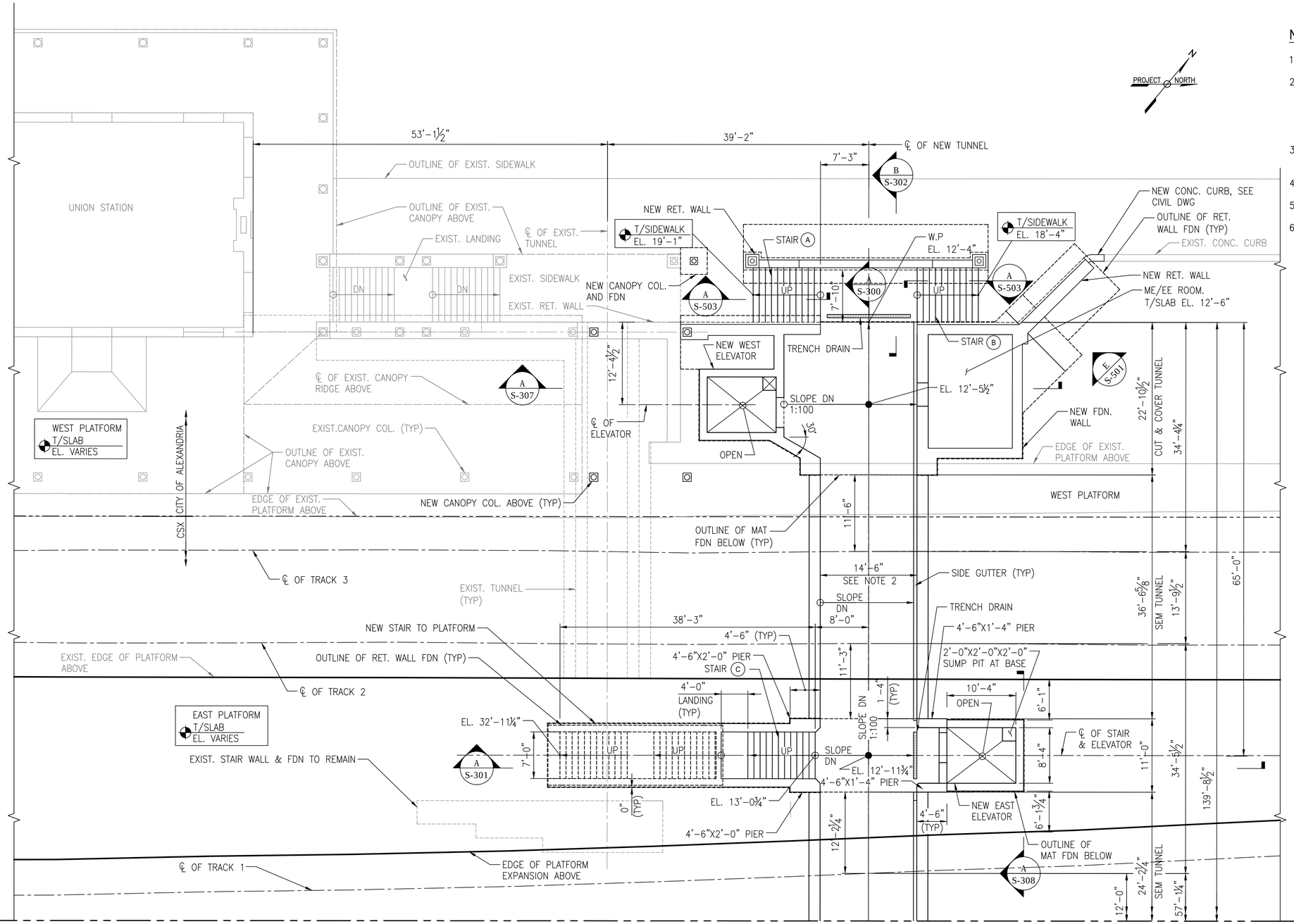

1 S-105 TUNNEL PART PLAN 1 OF 2
SCALE: 1/8" = 1'-0"

NOTES:

1. FOR GENERAL NOTES, REFER TO DRAWINGS S-001 TO S-004.
2. PLAN VIEW SHOWN IN THIS SHEET IS AT THE ELEVATION OF SEM TUNNEL SPRING LINE. TUNNEL SPRING LINE IS 3'-1¼" ABOVE TUNNEL INVERT SLAB ALONG THE TUNNEL CENTERLINE FOR SECTION THROUGH SEM TUNNEL AND ELEVATION OF TUNNEL SPRING LINE, REFER TO STRUCTURAL-TUNNEL DRAWING SERIES.
3. FOR INFORMATION RELATED TO SEM TUNNEL, REFER TO STRUCTURAL-TUNNEL DRAWING SERIES.
4. FOR ENLARGED WEST CUT AND COVER FOUNDATION PLAN, SEE DRAWING S-400.
5. STATION POINT ALONG NEW TUNNEL CENTER LINE STA. 113+32.33.
6. FOR TUNNEL WATERPROOFING PLANS AND DETAILS, REFER TO DRAWINGS S-780 TO S-786 AND S-300.

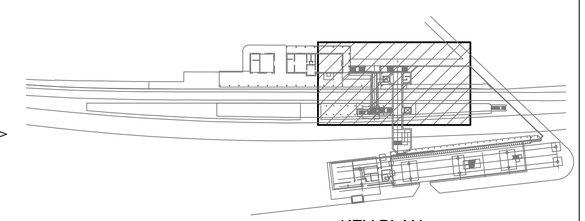

KEY PLAN
SCALE: 1/128" = 1'-0"

60% SUBMITTAL

CONTRACT NO:		REVISIONS			
PROJECT NO:		BY	NO	DATE	DESCRIPTION
	DATE:				
DESIGNED: IA					
DRAFTED: LTN					
CHECKED: MA/DB					
APPROVED:					

Gannett Fleming

VIRGINIA RAILWAY EXPRESS

ALEXANDRIA PEDESTRIAN TUNNEL

DISCIPLINE: STRUCTURAL
TUNNEL PART PLAN 1 OF 2

DRAWING NO: S-105

LIST NO:

SCALE: 1/8" = 1'-0"

DATE ISSUED: 5/25/16

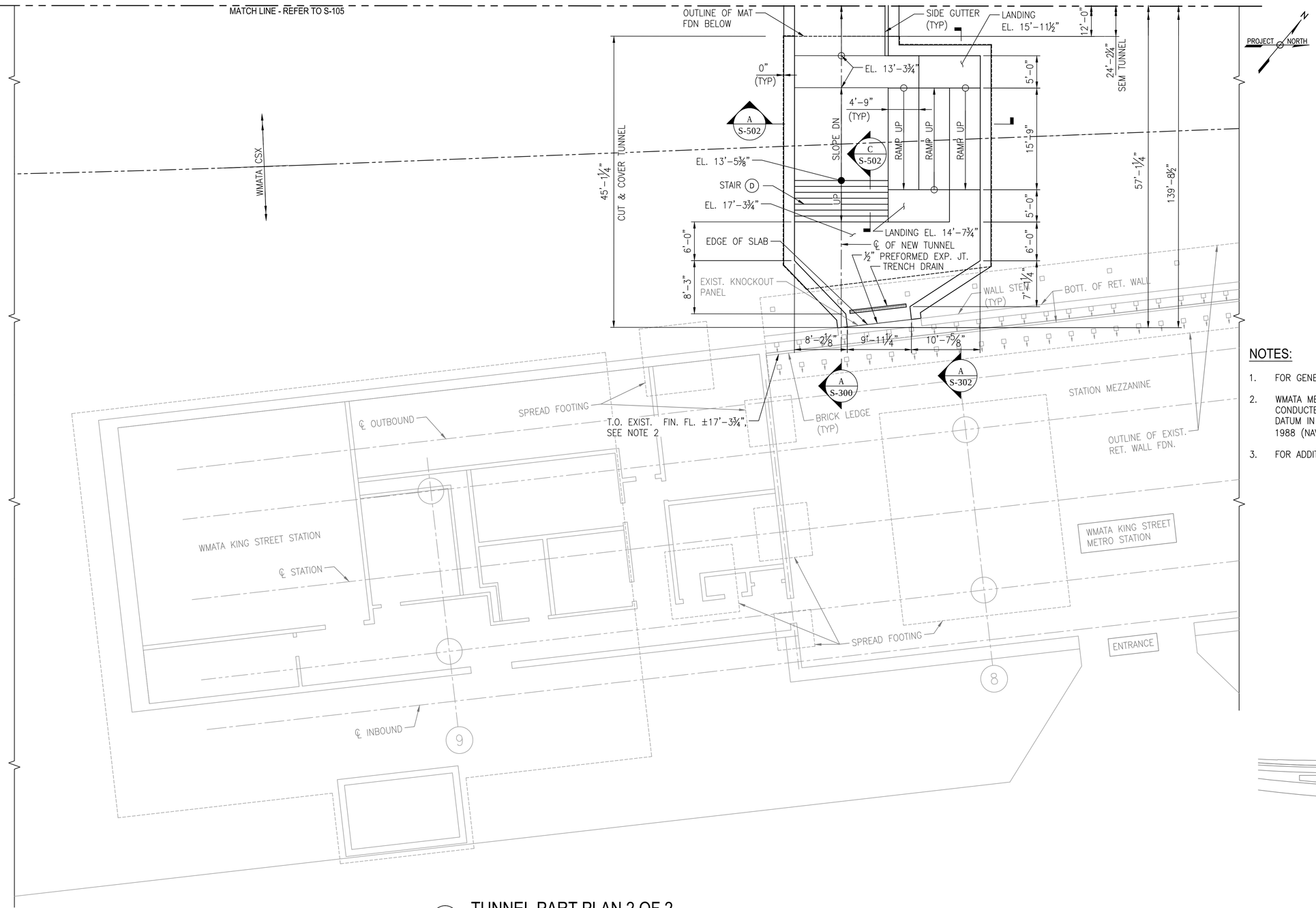

1 S-106 TUNNEL PART PLAN 2 OF 2

SCALE: 1/8" = 1'-0"

NOTES:

1. FOR GENERAL NOTES, REFER TO DRAWINGS S-001 TO S-004.
2. WMATA MEZZANINE FINISH FLOOR ELEVATION SHOWN IS BASED SURVEY CONDUCTED BY CHRISTOPHER CONSULTANTS. THE VERTICAL REFERENCE DATUM IN SURVEY IS TAKEN AS THE NORTH AMERICAN VERTICAL DATUM OF 1988 (NAVD88).
3. FOR ADDITIONAL NOES, SEE DRAWIING S-105.

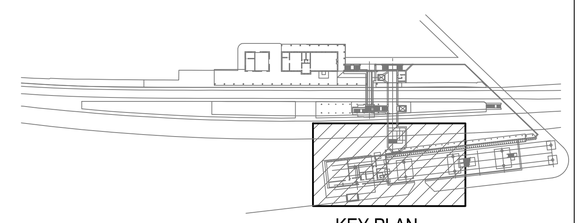

KEY PLAN

SCALE: 1/128" = 1'-0"

60% SUBMITTAL

CONTRACT NO:	REVISIONS				
PROJECT NO:	BY	NO	DATE	DESCRIPTION	
DATE:					
DESIGNED: IA					
DRAFTED: LTN					
CHECKED: MA/DB					
APPROVED:					

Gannett Fleming

VRE

VIRGINIA RAILWAY EXPRESS

ALEXANDRIA PEDESTRIAN TUNNEL

DISCIPLINE: STRUCTURAL

TUNNEL PART PLAN 2 OF 2

SCALE: 1/8" = 1'-0"

DATE ISSUED: 5/25/16

DRAWING NO: S-106

LIST NO:

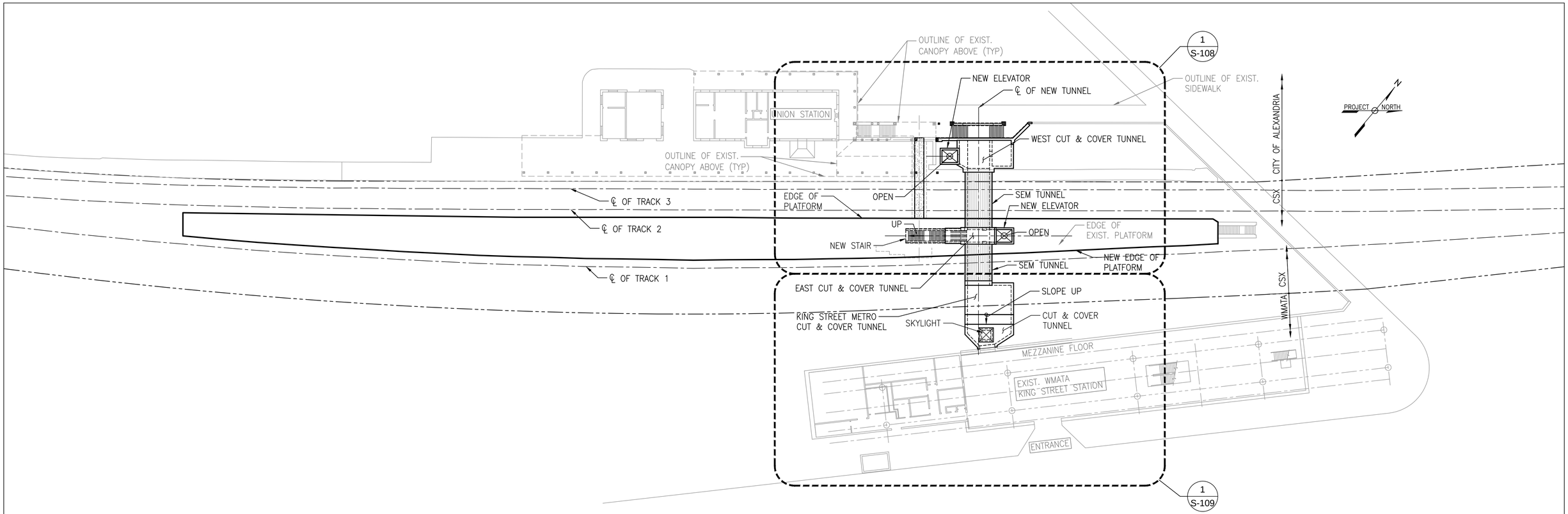

1 S-107 OVERALL TUNNEL ROOF PLAN

SCALE: 1/32" = 1'-0"

NOTES:

1. FOR GENERAL NOTES, REFER TO DRAWINGS S–001 TO S–004.
2. FOR ADDITIONAL NOTES, SEE DRAWING S–108.

60% SUBMITTAL

CONTRACT NO:		REVISIONS					DISCIPLINE:	DRAWING NO:
PROJECT NO:		BY	NO	DATE	DESCRIPTION	Gannett Fleming	VIRGINIA RAILWAY EXPRESS	STRUCTURAL OVERALL TUNNEL ROOF PLAN	S-107
	DATE:						ALEXANDRIA PEDESTRIAN TUNNEL		LIST NO:
DESIGNED: IA								SCALE: 1/32" = 1'–0"	DATE ISSUED: 5/25/16
DRAFTED: LTN									
CHECKED: MA/DB									
APPROVED:									

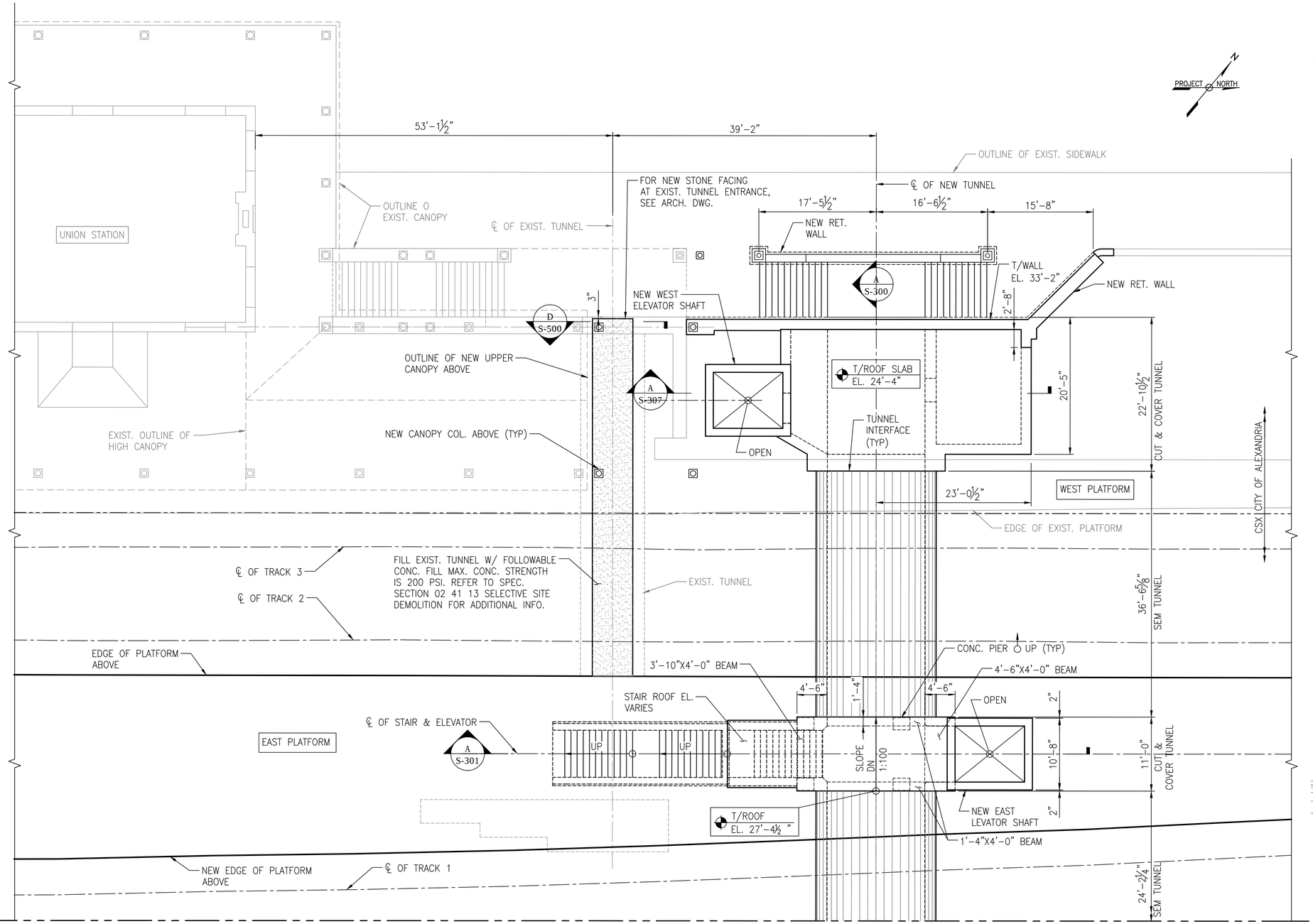

MATCH LINE - REFER TO S-109

1 / S-108 TUNNEL ROOF PART PLAN 1 OF 2

SCALE: 1/8" = 1'-0"

NOTES:

1. FOR GENERAL NOTES, REFER TO DRAWINGS S-001 TO S-004.
2. FOR INFORMATION RELATED TO SEM TUNNEL, REFER TO STRUCTURAL-TUNNEL DRAWING SERIES.

LEGEND:

○ PIER UP

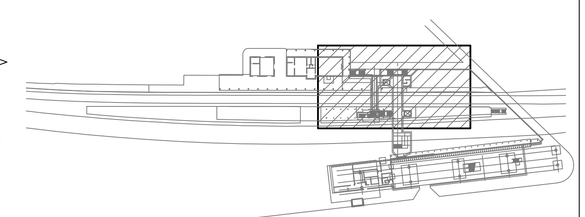

KEY PLAN

SCALE: 1/128" = 1'-0"

60% SUBMITTAL

CONTRACT NO:		REVISIONS			
PROJECT NO:		BY	NO	DATE	DESCRIPTION
	DATE:				
DESIGNED: IA					
DRAFTED: LTN					
CHECKED: MA/DB					
APPROVED:					

Gannett Fleming

VRE

VIRGINIA RAILWAY EXPRESS

ALEXANDRIA PEDESTRIAN TUNNEL

DISCIPLINE: STRUCTURAL

TUNNEL ROOF PART PLAN 1 OF 2

DRAWING NO: S-108

LIST NO:

SCALE: 1/8" = 1'-0"

DATE ISSUED: 5/25/16

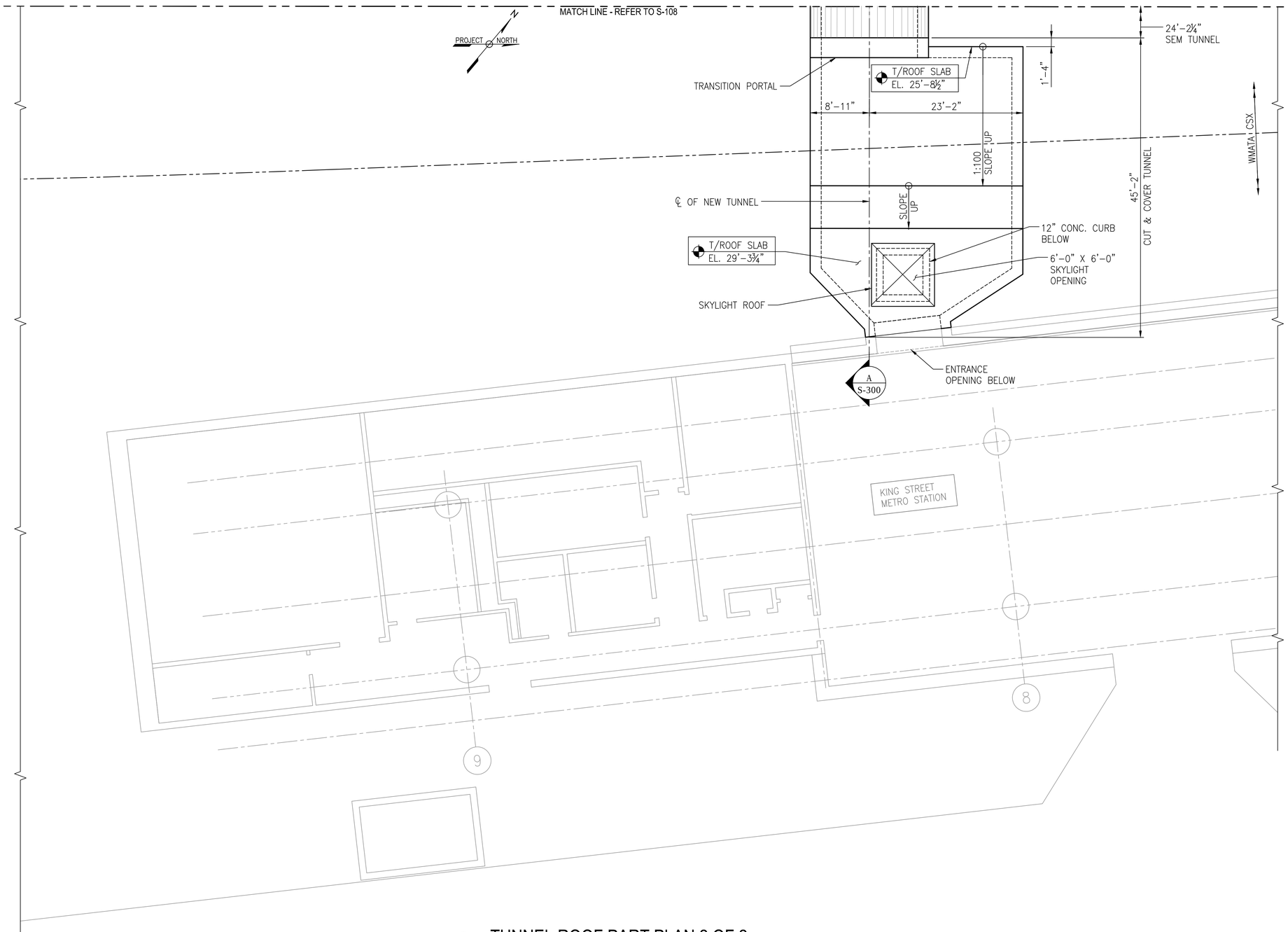

1 S-109 TUNNEL ROOF PART PLAN 2 OF 2
SCALE: 1/8" = 1'-0"

NOTES:

1. FOR GENERAL NOTES, REFER TO DRAWINGS S-001 TO S-004.
2. FOR ADDITIONAL NOTES, SEE DRAWING S-108.

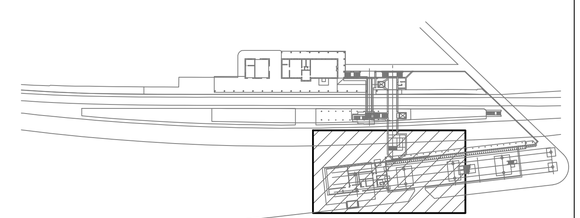

KEY PLAN
SCALE: 1/128" = 1'-0"

60% SUBMITTAL

CONTRACT NO:	REVISIONS				
PROJECT NO:	BY	NO	DATE	DESCRIPTION	
DATE:					
DESIGNED: IA					
DRAFTED: LTN					
CHECKED: MA/DB					
APPROVED:					

Gannett Fleming

VRE

VIRGINIA RAILWAY EXPRESS

ALEXANDRIA
PEDESTRIAN TUNNEL

DISCIPLINE:
STRUCTURAL
TUNNEL ROOF PART PLAN 2 OF 2

SCALE: 1/8" = 1'-0"

DATE ISSUED: 5/25/16

DRAWING NO: S-109

LIST NO:

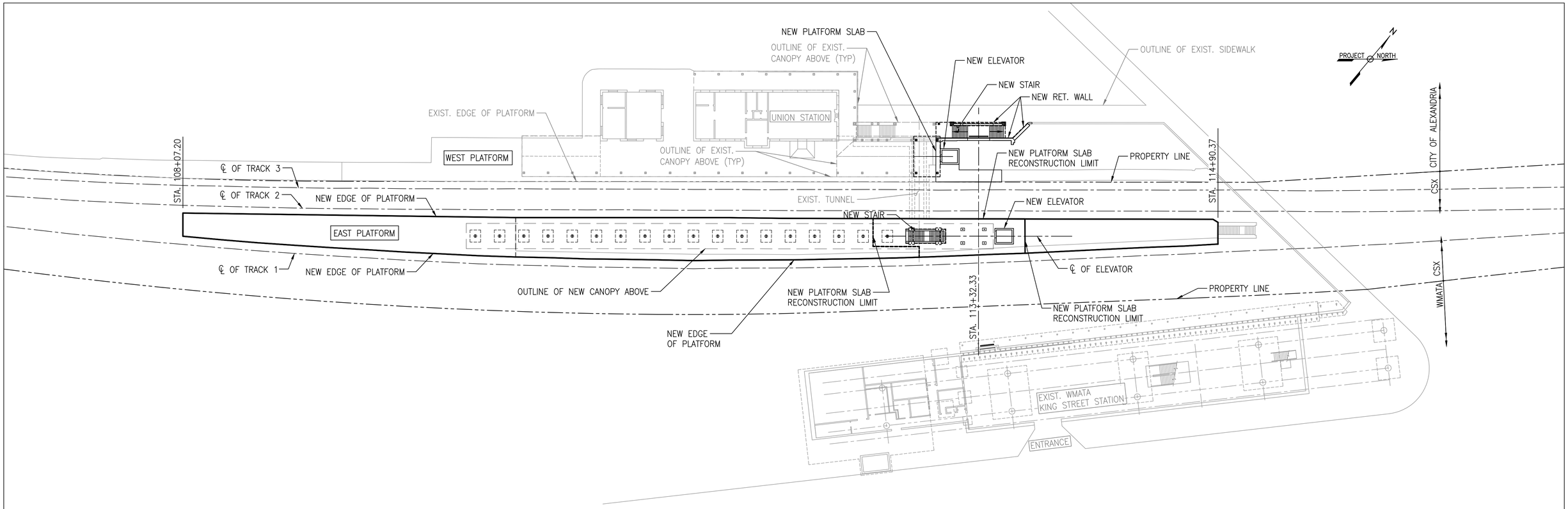

1 S-110 OVERALL PLATFORM PLAN
SCALE: 1/32" = 1'-0"

NOTES:

1. FOR GENERAL NOTES, REFER TO DRAWINGS S–001 TO S–004.

60% SUBMITTAL

CONTRACT NO:	REVISIONS				
PROJECT NO:	BY	NO	DATE	DESCRIPTION	
DATE:					
DESIGNED: IA					
DRAFTED: LTN					
CHECKED: MA/DB					
APPROVED:					

Gannett Fleming

VRE

VIRGINIA RAILWAY EXPRESS

ALEXANDRIA
PEDESTRIAN TUNNEL

DISCIPLINE:
STRUCTURAL
OVERALL PLATFORM PLAN

SCALE: 1/32" = 1'–0"

DATE ISSUED: 5/25/16

DRAWING NO: S-110

LIST NO:

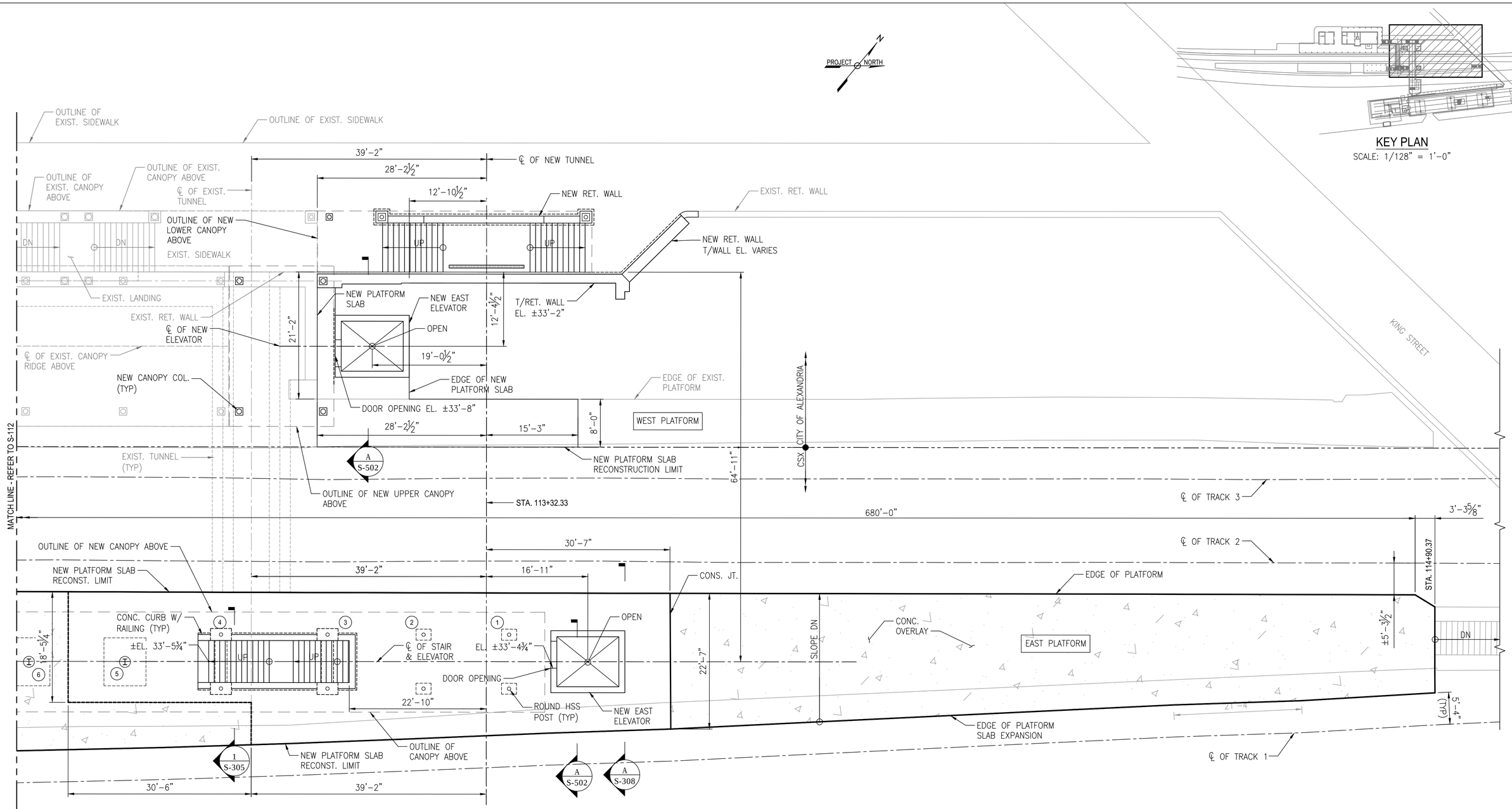

KEY PLAN

SCALE: 1/128" = 1'-0"

LEGEND:

CONCRETE OVERLAY

(1) COLUMN LINE

NOTES:

1. FOR GENERAL NOTES, REFER TO DRAWINGS S-001 TO S-004.
2. FOR ADDITIONAL INFORMATION ON PLATFORM SLAB, REFER TO DRAWINGS S-303 TO S-305.

(1/S-111) PLATFORM PART PLAN 1 OF 3

SCALE: 1/8" = 1'-0"

60% SUBMITTAL

CONTRACT NO:		REVISIONS			
PROJECT NO:		BY	NO	DATE	DESCRIPTION
	DATE:				
DESIGNED: IA					
DRAFTED: LTN					
CHECKED: MA/DB					
APPROVED:					

Gannett Fleming

VRE

VIRGINIA RAILWAY EXPRESS

ALEXANDRIA PEDESTRIAN TUNNEL

DISCIPLINE: STRUCTURAL PLATFORM PART PLAN 1 OF 3

DRAWING NO: S-111

LIST NO:

SCALE: 1/8" = 1'-0"

DATE ISSUED: 5/25/16

KEY PLAN
SCALE: 1/128" = 1'-0"

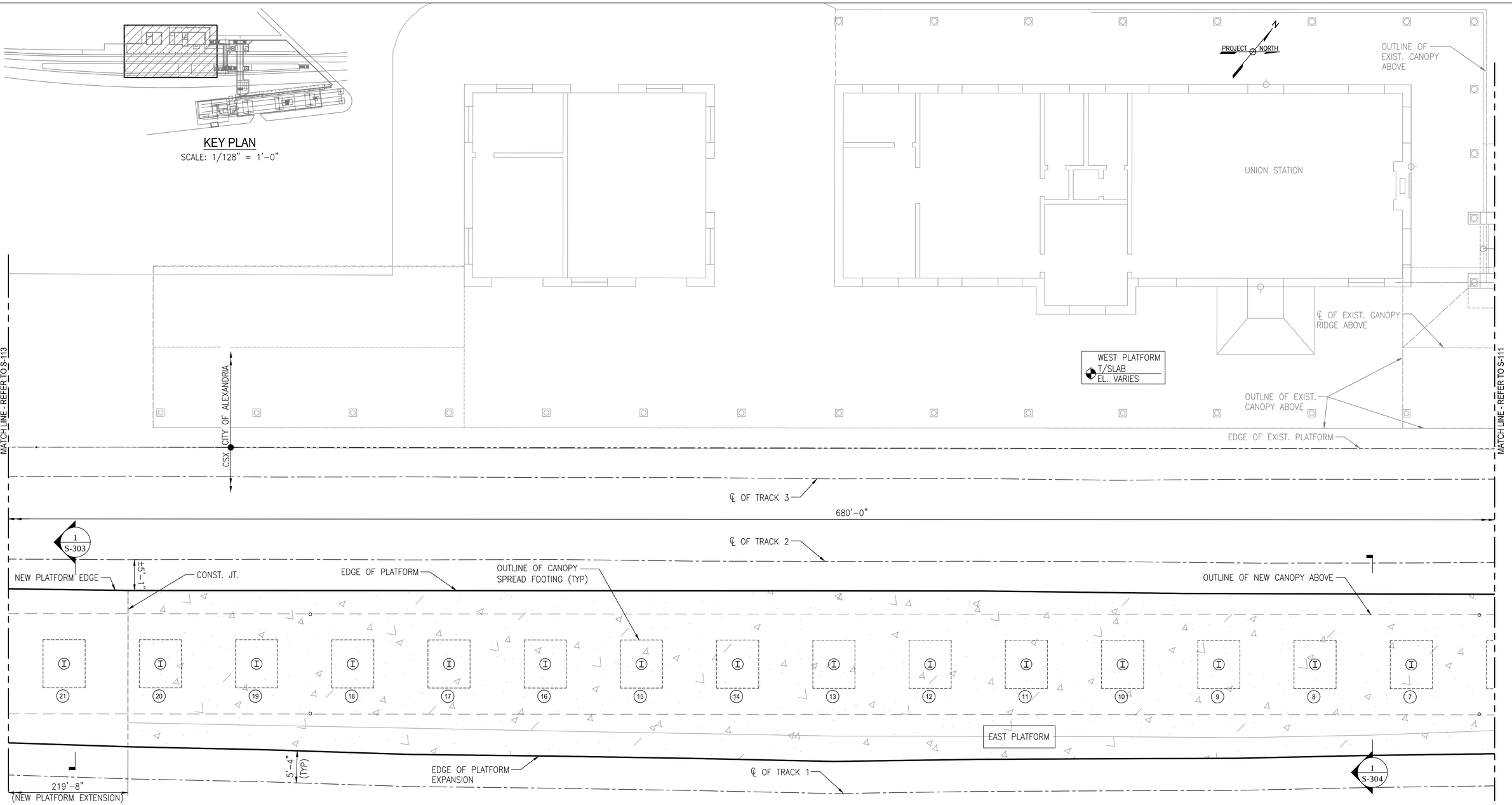

LEGEND:

CONCRETE OVERLAY

(1) COLUMN LINE

NOTES:

1. FOR GENERAL NOTES, REFER TO DRAWINGS S-001 TO S-004.

(1) S-112 PLATFORM PART PLAN 2 OF 3
SCALE: 1/8" = 1'-0"

60% SUBMITTAL

CONTRACT NO:		REVISIONS			
PROJECT NO:		BY	NO	DATE	DESCRIPTION
	DATE:				
DESIGNED: IA					
DRAFTED: LTN					
CHECKED: MA/DB					
APPROVED:					

Gannett Fleming

VRE

VIRGINIA RAILWAY EXPRESS

ALEXANDRIA
PEDESTRIAN TUNNEL

DISCIPLINE: STRUCTURAL
PLATFORM PART PLAN 2 OF 3

SCALE: 1/8" = 1'-0"

DATE ISSUED: 5/25/16

DRAWING NO: S-112

LIST NO:

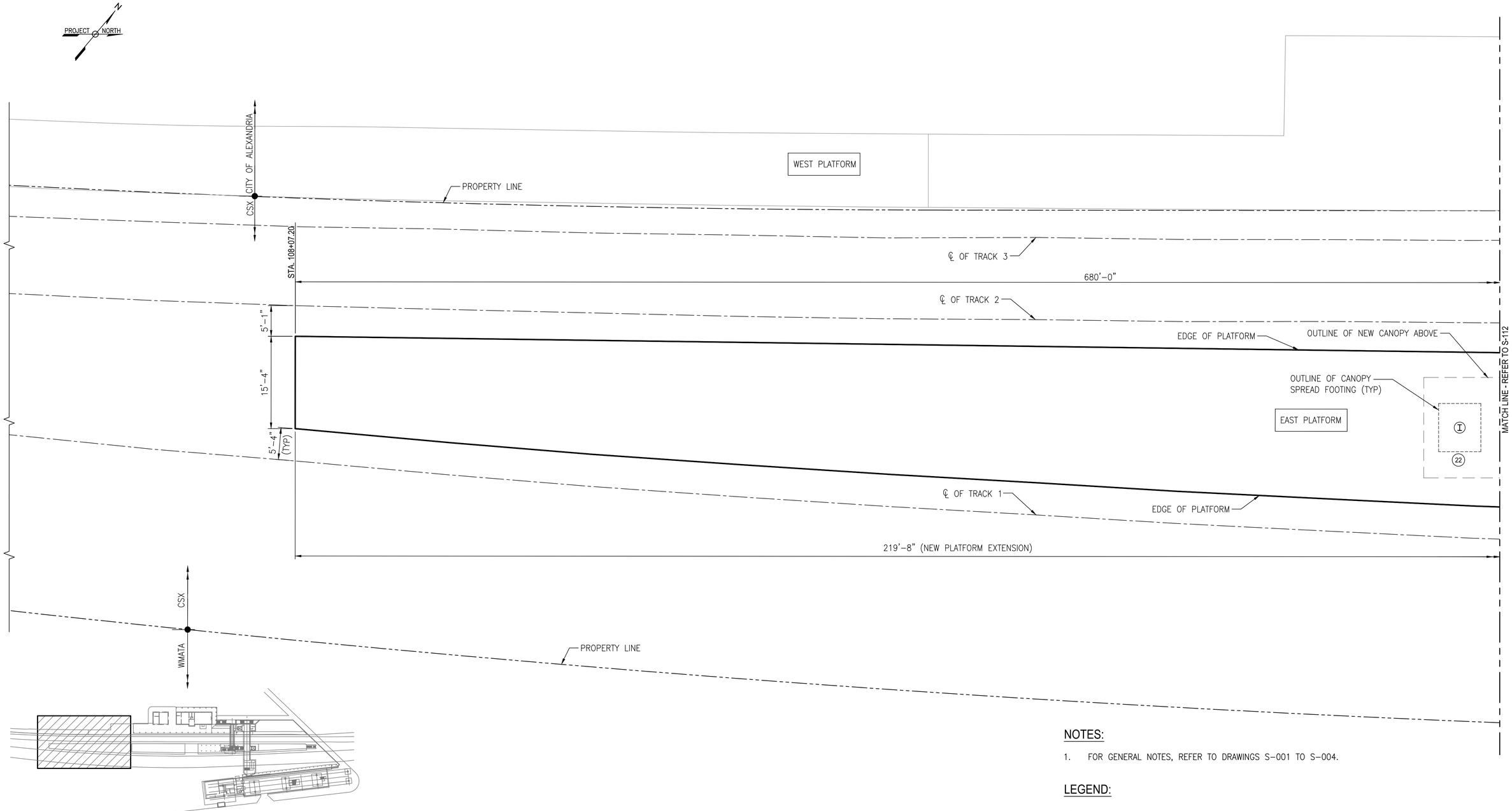

KEY PLAN
SCALE: 1/128" = 1'-0"

1 S-113 PLATFORM PART PLAN 3 OF 3
SCALE: 1/8" = 1'-0"

NOTES:

1. FOR GENERAL NOTES, REFER TO DRAWINGS S-001 TO S-004.

LEGEND:

1 COLUMN LINE

60% SUBMITTAL

CONTRACT NO:	REVISIONS					
PROJECT NO:	BY	NO	DATE	DESCRIPTION		
DATE:						
DESIGNED: IA						
DRAFTED: LTN						
CHECKED: MA/DB						
APPROVED:						

Gannett Fleming

VIRGINIA RAILWAY EXPRESS

ALEXANDRIA
PEDESTRIAN TUNNEL

DISCIPLINE: STRUCTURAL
PLATFORM PART PLAN 3 OF 3

DRAWING NO: S-113

LIST NO:

SCALE: 1/8" = 1'-0"

DATE ISSUED: 5/25/16

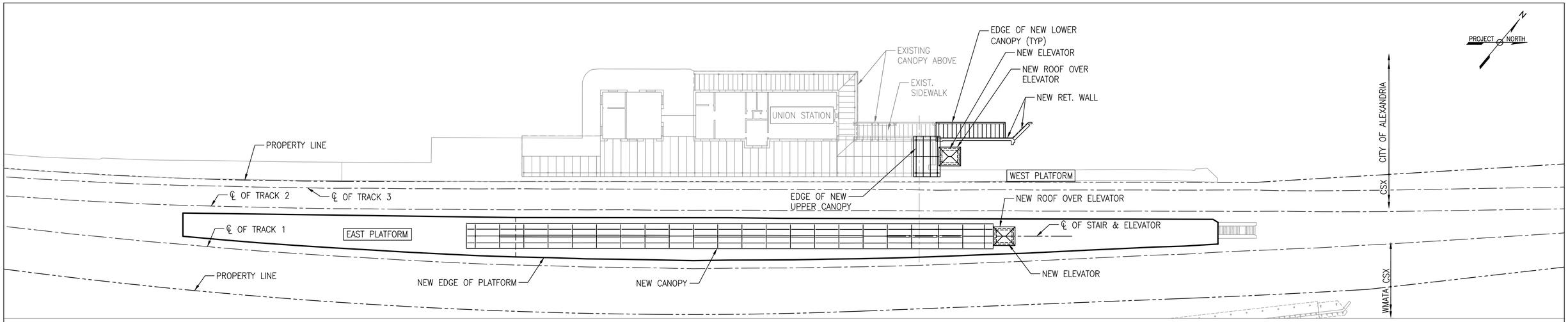

1 / S-114 **OVERALL CANOPY PLAN**

SCALE: 1/32" = 1'-0"

NOTES:

1. FOR GENERAL NOTES, REFER TO DRAWINGS S-001 TO S-004.

60% SUBMITTAL

CONTRACT NO:		REVISIONS			
PROJECT NO:		BY	NO	DATE	DESCRIPTION
	DATE:				
DESIGNED: IA					
DRAFTED: LTN					
CHECKED: MA/DB					
APPROVED:					

Gannett Fleming

VIRGINIA RAILWAY EXPRESS

ALEXANDRIA PEDESTRIAN TUNNEL

DISCIPLINE: STRUCTURAL OVERALL CANOPY PLAN

DRAWING NO: S-114

LIST NO:

SCALE: 1/32" = 1'-0"

DATE ISSUED: 5/25/16

NOTES:

1. FOR GENERAL NOTES, REFER TO DRAWINGS S-001 TO S-004.
2. EXISTING LOWER CANOPY ROOF

	¾" PLYWOOD ROOF SHEATHING OVER ¾" TONGUE AND GROOVE BEADED BOARD.
RJ1	3½" X 9¼" WOOD JOIST
RJ2	4 – 2" X 12" WOOD BEAM
RJ3	3½" X 14" + 1¾" X 14" WOOD GIRDER

3. FOR ELEVATOR ROOF PART PLAN, SEE DRAWING S-402.

LEGEND:

►——	MOMENT CONNECTION
①	COLUMN LINE

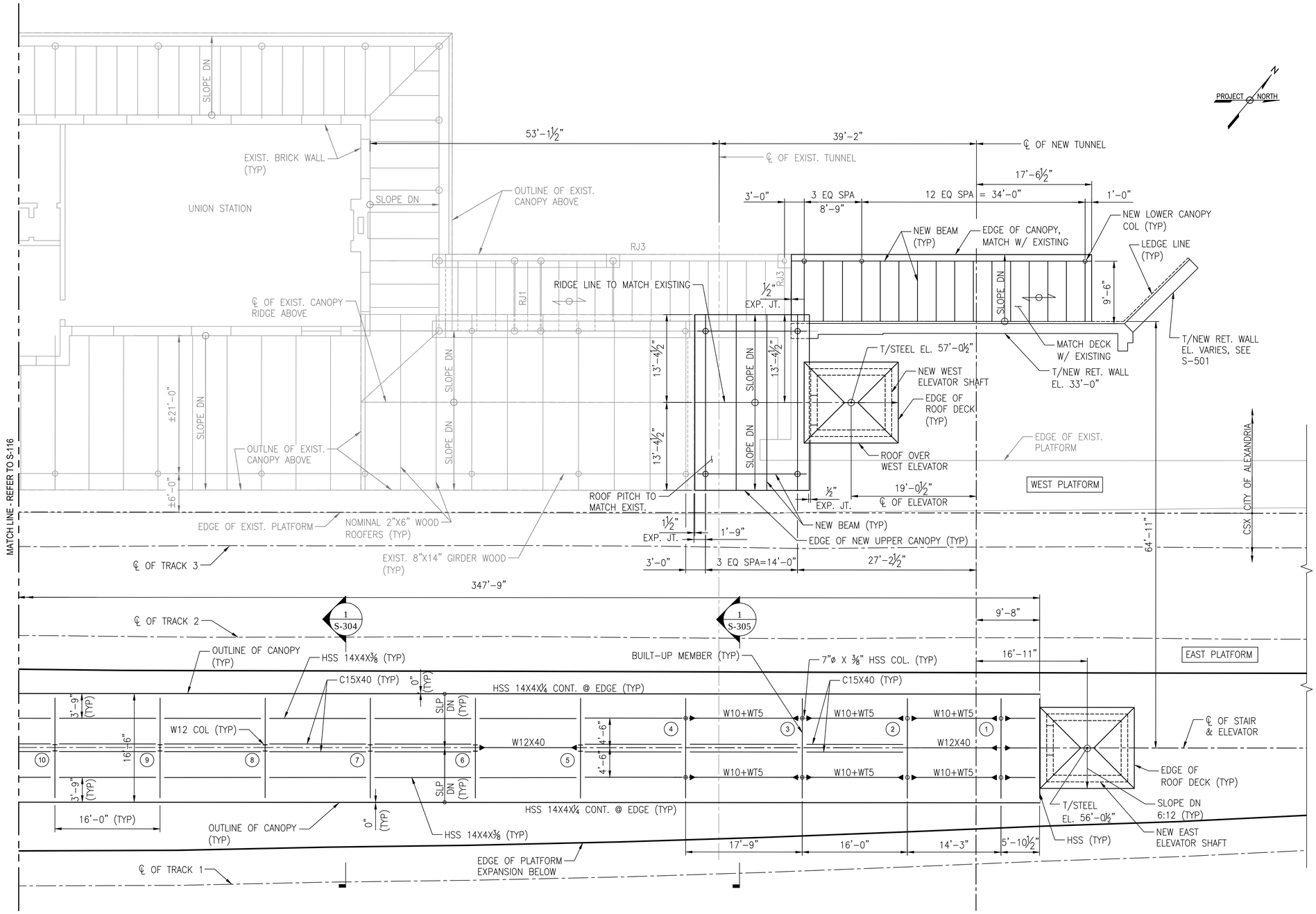

1 S-115 CANOPY PART PLAN 1 OF 2
SCALE: 1/8" = 1'-0"

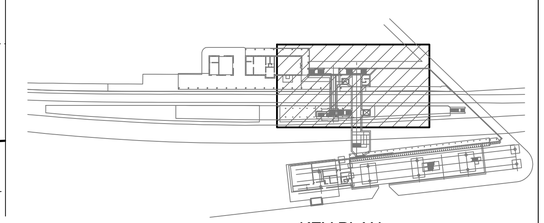

KEY PLAN
SCALE: 1/128" = 1'-0"

60% SUBMITTAL

CONTRACT NO:	
PROJECT NO:	
	DATE:
DESIGNED: IA	
DRAFTED: LTN	
CHECKED: MA/DB	
APPROVED:	

REVISIONS

BY	NO	DATE	DESCRIPTION

Gannett Fleming

VIRGINIA RAILWAY EXPRESS

ALEXANDRIA PEDESTRIAN TUNNEL

DISCIPLINE: STRUCTURAL

CANOPY PART PLAN 1 OF 2

DRAWING NO: S-115

LIST NO:

SCALE: 1/8" = 1'-0"

DATE ISSUED: 5/25/16

KEY PLAN
SCALE: 1/128" = 1'-0"

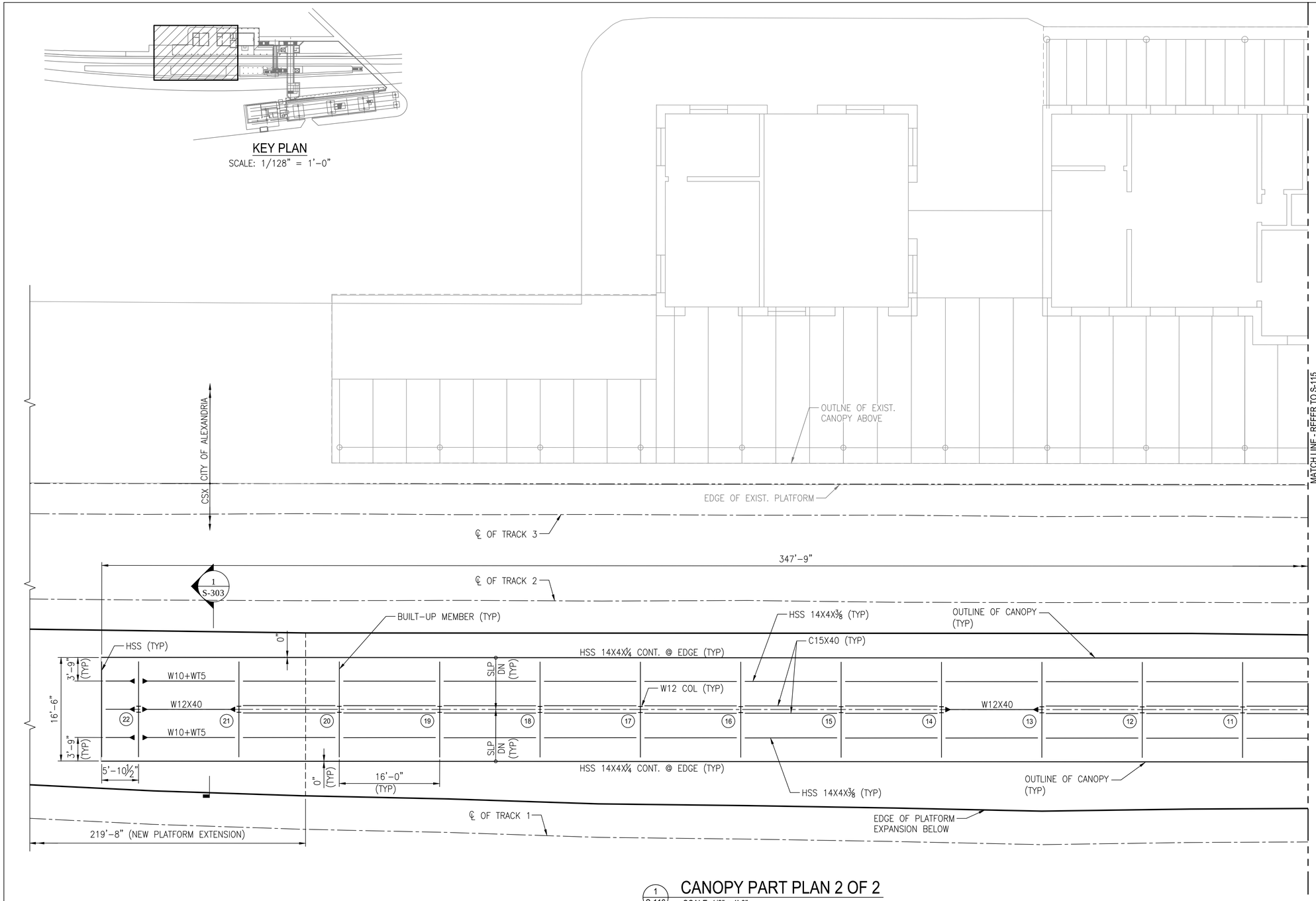

1 S-116 CANOPY PART PLAN 2 OF 2
SCALE: 1/8" = 1'-0"

NOTES:

1. FOR GENERAL NOTES, REFER TO DRAWINGS S-001 TO S-004.

LEGEND:

MOMENT CONNECTION

(1) COLUMN LINE

60% SUBMITTAL

CONTRACT NO:	REVISIONS				
PROJECT NO:	BY	NO	DATE	DESCRIPTION	
DATE:					
DESIGNED: IA					
DRAFTED: LTN					
CHECKED: MA/DB					
APPROVED:					

Gannett Fleming

VRE

VIRGINIA RAILWAY EXPRESS

ALEXANDRIA
PEDESTRIAN TUNNEL

DISCIPLINE: STRUCTURAL
CANOPY PART PLAN 2 OF 2

DRAWING NO: S-116

LIST NO:

SCALE: 1/8" = 1'-0"

DATE ISSUED: 5/25/16

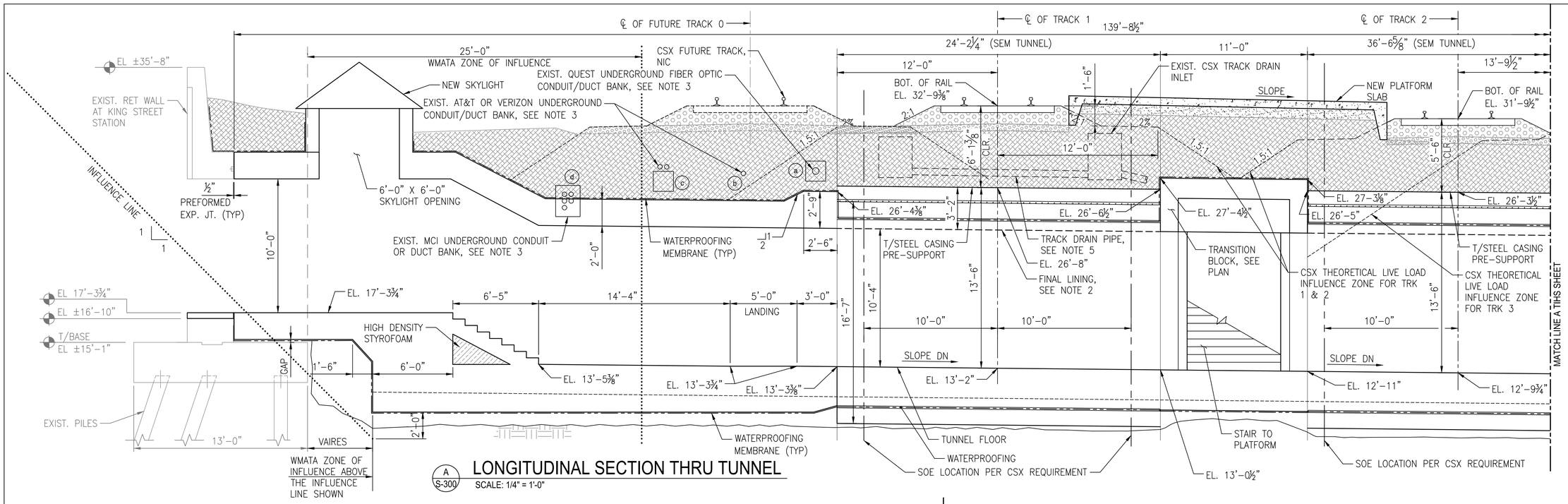

A S-300 LONGITUDINAL SECTION THRU TUNNEL
SCALE: 1/4" = 1'-0"

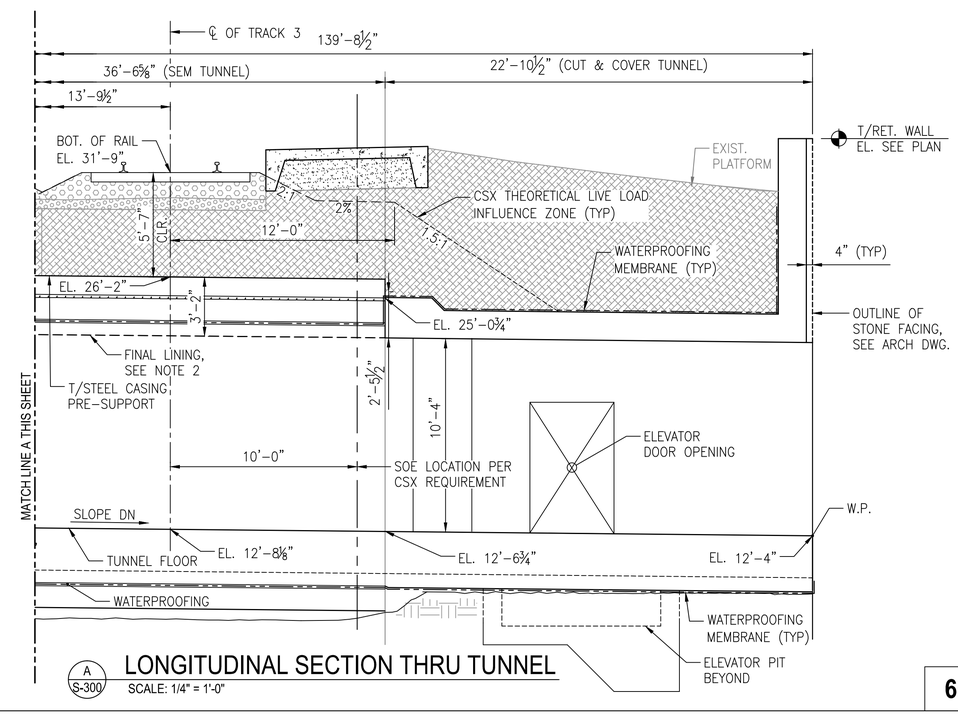

A S-300 LONGITUDINAL SECTION THRU TUNNEL
SCALE: 1/4" = 1'-0"

NOTES:

1. FOR GENERAL NOTES, REFER TO DRAWINGS S-001 TO S-004.
2. FOR INFO RELATED TO SEM TUNNEL, REFER STRUCTURAL-TUNNEL DRAWING SERIES.
3. LOCATION OF (b) TO (d) CONDUIT/DUCT BANKS ARE BASED ON LIMITED TEST HOLE INFORMATION DEVELOPED BY ACCUMARK DATED 04-11-15. LOCATION OF CONDUIT/DUCT BANK (a) IS BASED ON GENERAL INFORMATION PROVIDED BY THE OWNER, QUEST CENTURY LINK. FOR TEMPORARY SUPPORT OF ALL EXISTING UTILITIES DURING CONSTRUCTION AND PERMANENT RELOCATION, REFER TO CIVIL DRAWINGS AND S-117.
4. FOR TUNNEL WATERPROOFING PLANS AND DETAILS, REFER TO DRAWINGS S-780 TO S-786.

LEGEND:

(a) CONDUIT/DUCT BANK NUMBER

60% SUBMITTAL

CONTRACT NO:	REVISIONS				
PROJECT NO:	BY	NO	DATE	DESCRIPTION	
DATE:					
DESIGNED: IA					
DRAFTED: LTN					
CHECKED: MA/DB					
APPROVED:					

Gannett Fleming

VRE

VIRGINIA RAILWAY EXPRESS

ALEXANDRIA PEDESTRIAN TUNNEL

DISCIPLINE: STRUCTURAL TUNNEL LONGITUDINAL SECTION

DRAWING NO: S-300

LIST NO:

SCALE: 1/4" = 1'-0"

DATE ISSUED: 5/25/16

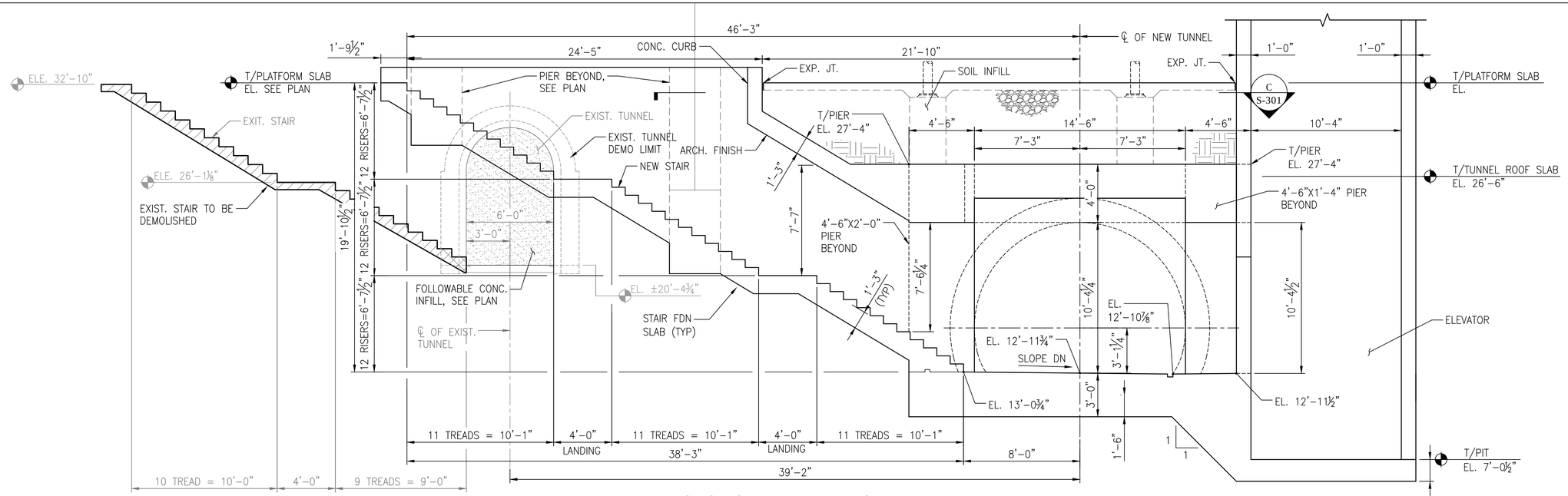

A S-301 **SECTION THRU NEW STAIR**
SCALE: 1/4" = 1'-0"

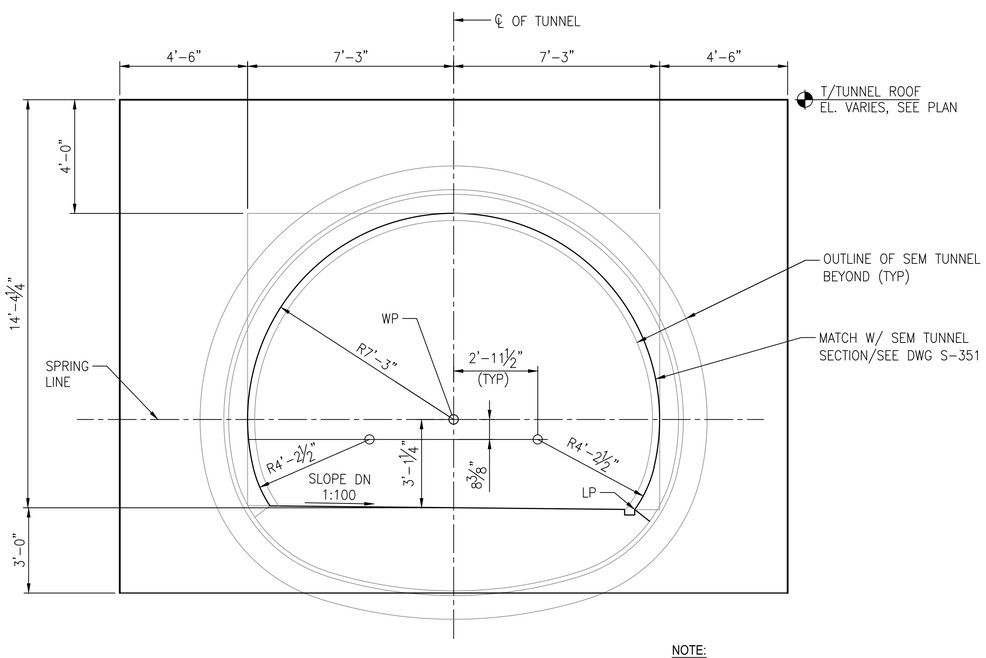

B S-301 **TUNNEL INTERFACE SECTION**
SCALE: 3/8" = 1'-0"

NOTE:
1. FOR ADDITIONAL INFORMATION RELATE SEM TUNNEL, REFER TO DRAWINGS S-351 AND S-352.

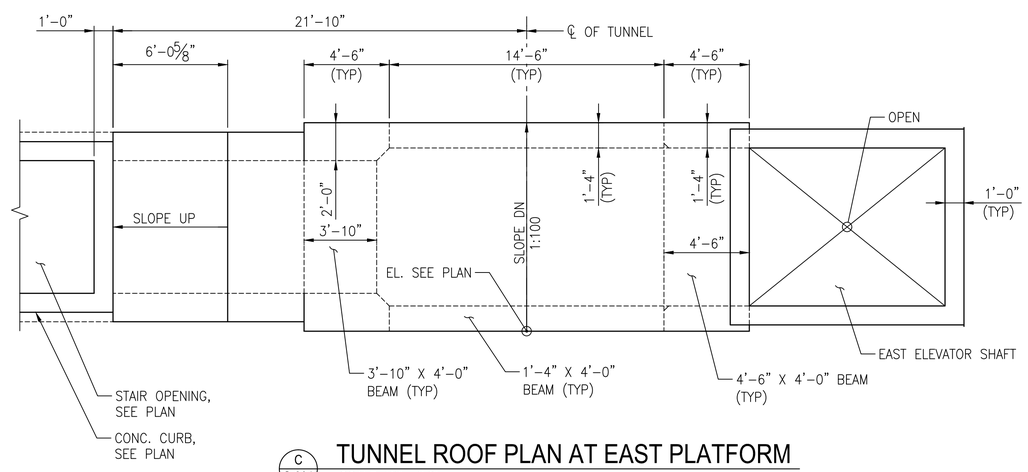

C S-301 **TUNNEL ROOF PLAN AT EAST PLATFORM**
SCALE: 1/4" = 1'-0"

NOTES:
1. FOR GENERAL NOTES, REFER TO DRAWINGS S-001 TO S-004.

60% SUBMITTAL

CONTRACT NO:	REVISIONS				
PROJECT NO:	BY	NO	DATE	DESCRIPTION	
DATE:					
DESIGNED: IA					
DRAFTED: LTN					
CHECKED: MA/DB					
APPROVED:					

Gannett Fleming

VRE

VIRGINIA RAILWAY EXPRESS

ALEXANDRIA PEDESTRIAN TUNNEL

DISCIPLINE: STRUCTURAL TUNNEL SECTIONS AND DETAILS

DRAWING NO: S-301

LIST NO:

SCALE: AS SHOWN

DATE ISSUED: 5/25/16

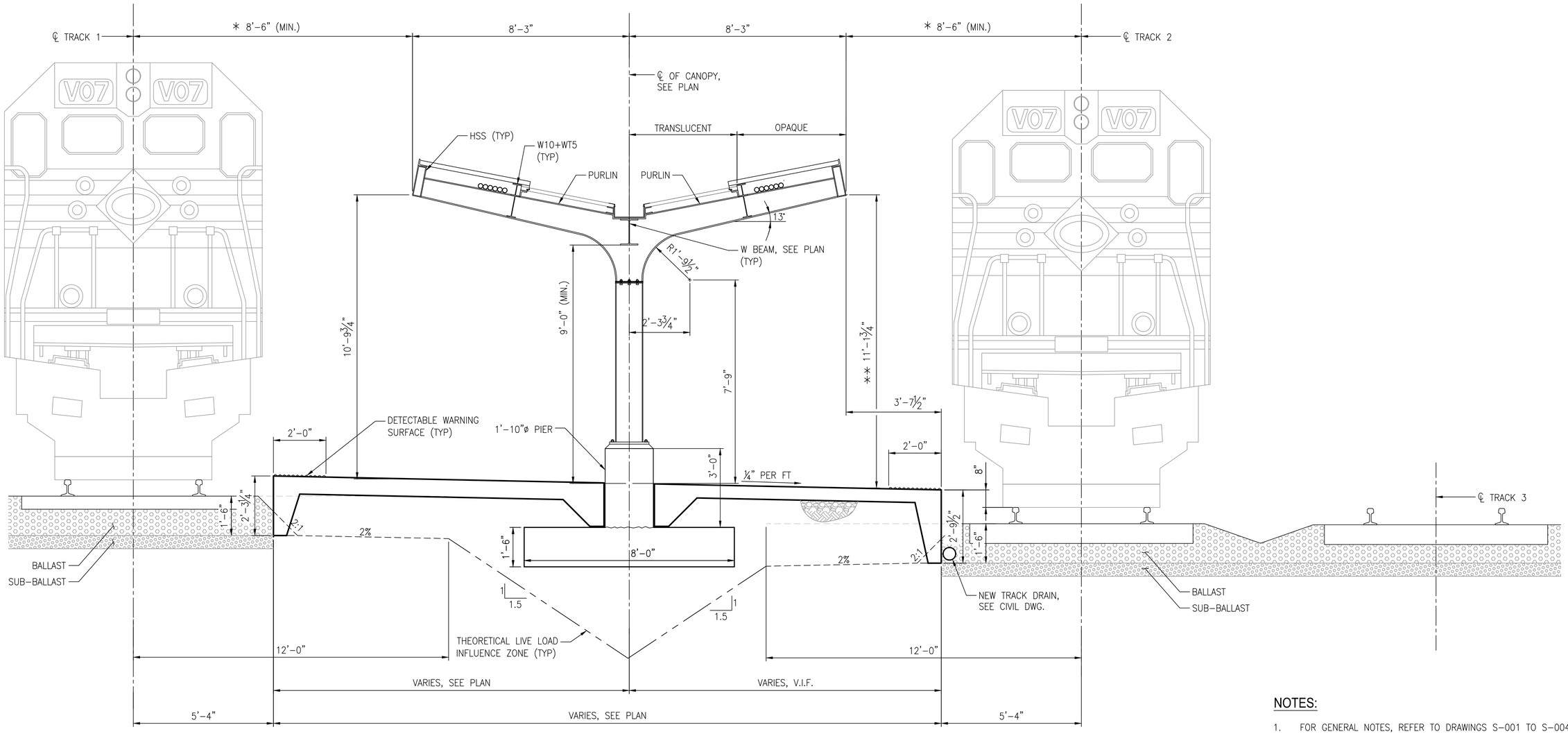

1 S-303 SECTION - INVERTED CANOPY

SCALE: 1/2" = 1'-0"

NOTES:

1. FOR GENERAL NOTES, REFER TO DRAWINGS S-001 TO S-004.
2. * CSX MINIMUM CLEARANCE – 9'-0" MINIMUM.
   VRE CLEARANCE – 7'-6" MINIMUM.

   ** VRE CLEARANCE – 8'-0" MINIMUM.

   PLATFORM WIDTH VARIES BETWEEN 28'-4" TO 23'-9".

60% SUBMITTAL

CONTRACT NO:	REVISIONS				
PROJECT NO:	BY	NO	DATE	DESCRIPTION	
DATE:					
DESIGNED: IA					
DRAFTED: LTN					
CHECKED: MA/DB					
APPROVED:					

Gannett Fleming

VRE

VIRGINIA RAILWAY EXPRESS

ALEXANDRIA PEDESTRIAN TUNNEL

DISCIPLINE: STRUCTURAL CANOPY SECTION 1 OF 3

DRAWING NO: S-303

LIST NO:

SCALE: AS SHOWN

DATE ISSUED: 5/25/16

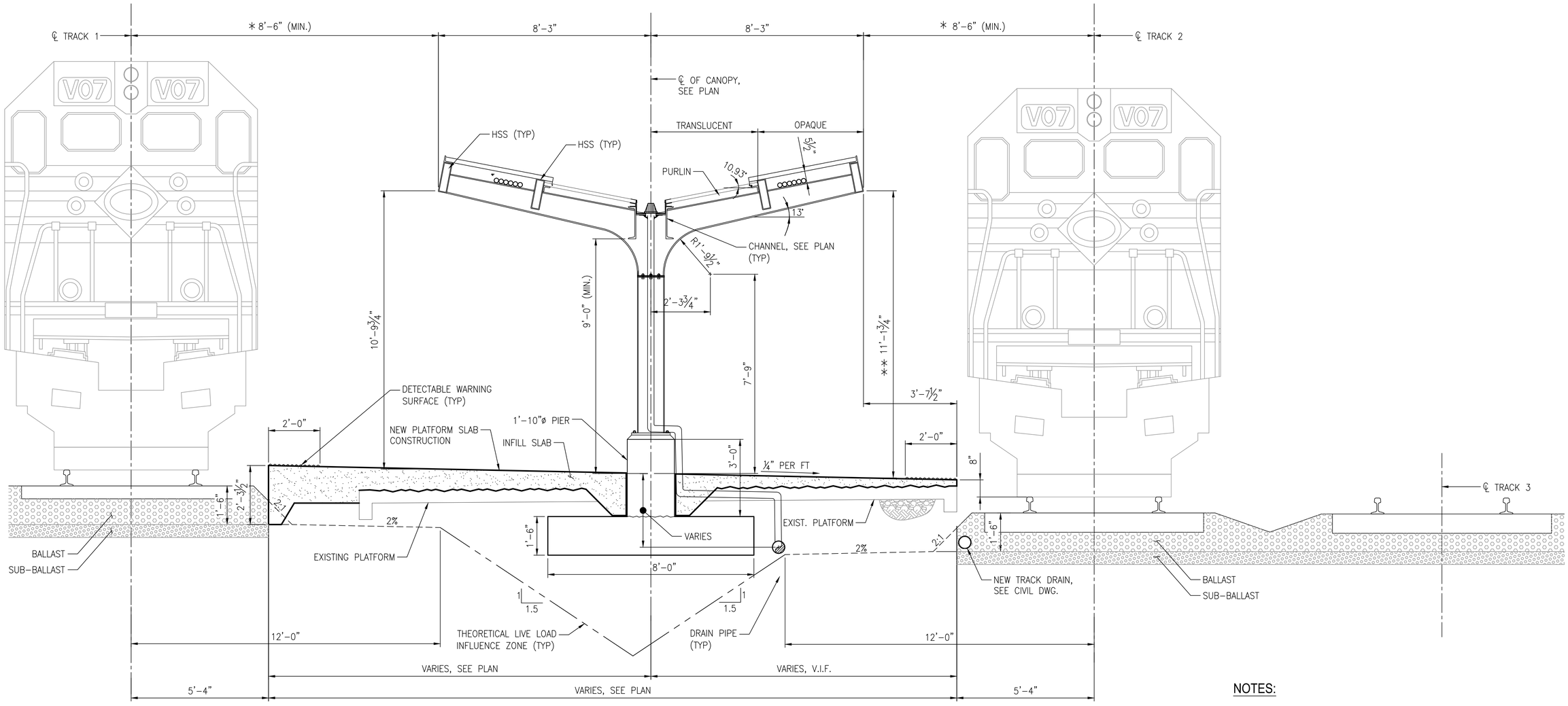

1 S-304 SECTION - INVERTED CANOPY

SCALE: 1/2" = 1'-0"

NOTES:

1. FOR GENERAL NOTES, REFER TO DRAWINGS S-001 TO S-004.
2. * CSX MINIMUM CLEARANCE – 9'-0" MINIMUM.
   VRE CLEARANCE – 7'-6" MINIMUM.

   ** VRE CLEARANCE – 8'-0" MINIMUM.

   PLATFORM WIDTH VARIES BETWEEN 28'-4" TO 23'-9".

60% SUBMITTAL

CONTRACT NO:		REVISIONS			
PROJECT NO:		BY	NO	DATE	DESCRIPTION
	DATE:				
DESIGNED:	IA				
DRAFTED:	LTN				
CHECKED:	MA/DB				
APPROVED:					

Gannett Fleming

VRE

VIRGINIA RAILWAY EXPRESS

ALEXANDRIA PEDESTRIAN TUNNEL

DISCIPLINE: STRUCTURAL CANOPY SECTION 2 OF 3

DRAWING NO: S-304

LIST NO:

SCALE: AS SHOWN

DATE ISSUED: 5/25/16

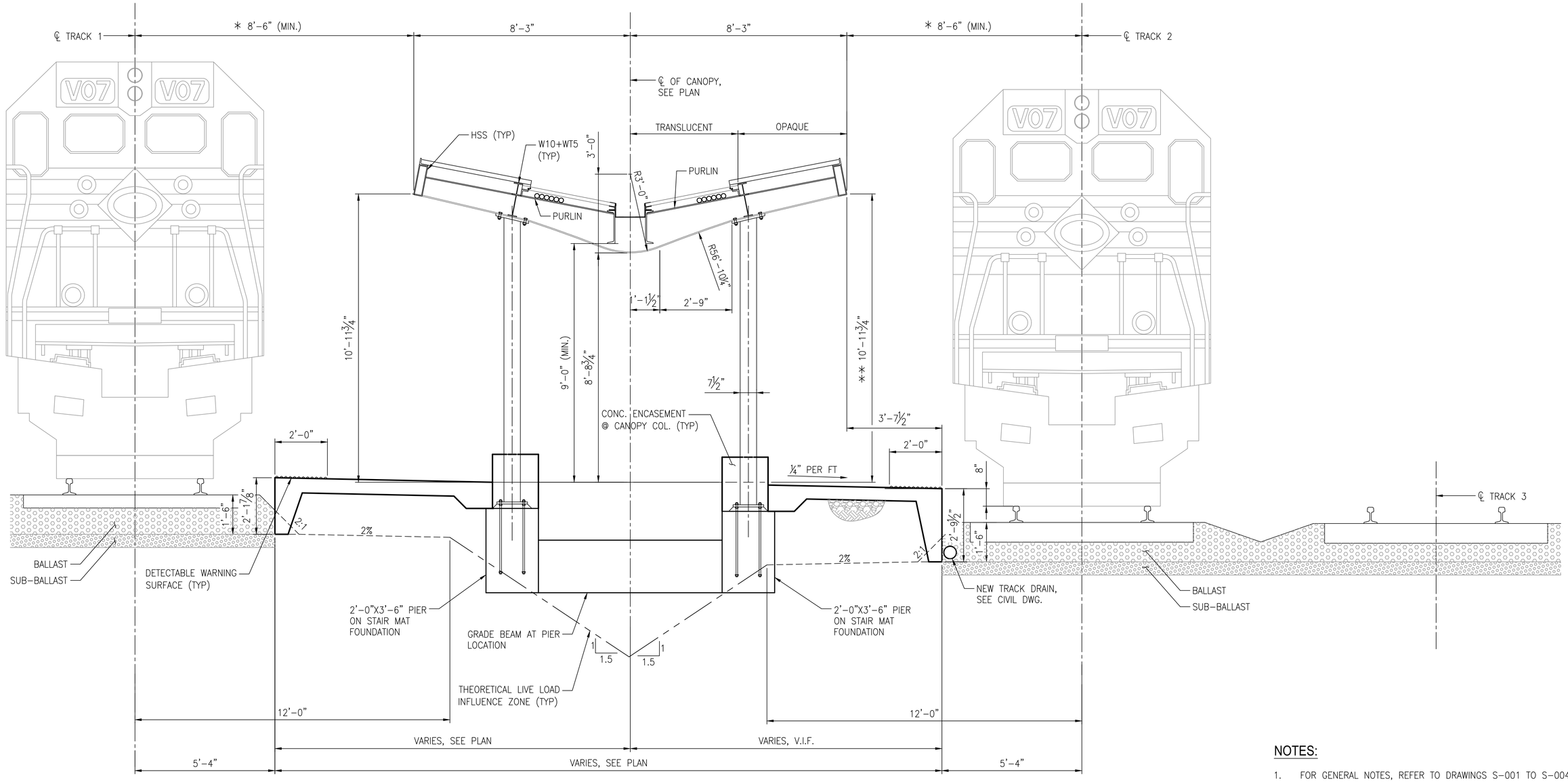

1 S-305 SECTION - INVERTED CANOPY

SCALE: 1/2" = 1'-0"

NOTES:

1. FOR GENERAL NOTES, REFER TO DRAWINGS S-001 TO S-004.
2. * CSX MINIMUM CLEARANCE – 9'-0" MINIMUM.
   VRE CLEARANCE – 7'-6" MINIMUM.

   ** VRE CLEARANCE – 8'-0" MINIMUM.

   PLATFORM WIDTH VARIES BETWEEN 28'-4" TO 23'-9".

60% SUBMITTAL

CONTRACT NO:	REVISIONS				
PROJECT NO:	BY	NO	DATE	DESCRIPTION	
DATE:					
DESIGNED: IA					
DRAFTED: LTN					
CHECKED: MA/DB					
APPROVED:					

Gannett Fleming

VRE

VIRGINIA RAILWAY EXPRESS

ALEXANDRIA PEDESTRIAN TUNNEL

DISCIPLINE: STRUCTURAL CANOPY SECTION 3 OF 3

DRAWING NO: S-305

LIST NO:

SCALE: AS SHOWN

DATE ISSUED: 5/25/16

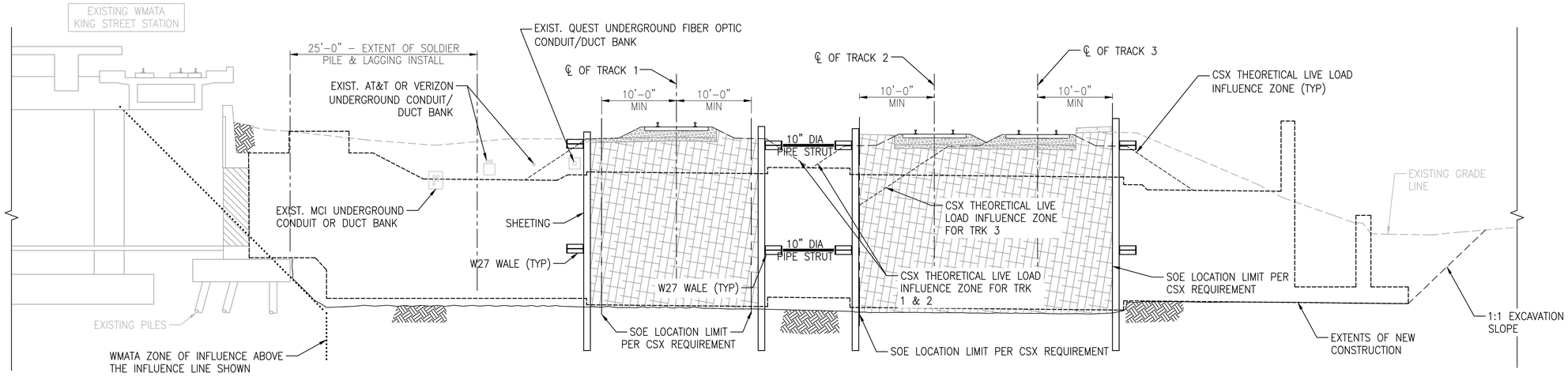

1 / S-306 SUPPORT OF EXCAVATION - LONGITUDINAL SECTION

SCALE: 1/8" = 1'-0"

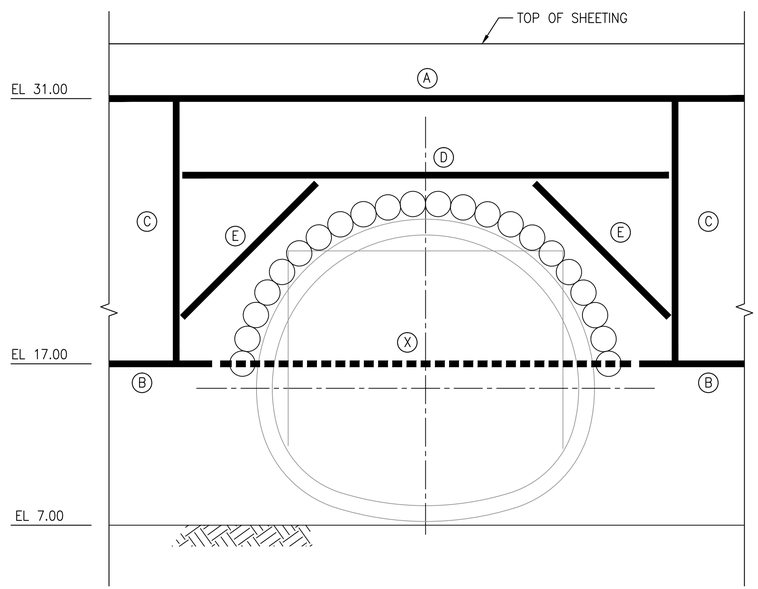

NOTE: ALL MEMBERS SHOWN ARE ASSUMED TO BE W27 SHAPES

2 / S-306 TYPICAL SHEETING SUPPORT AT TUNNELS ENDS - ELEVATION VIEW

SCALE: 1/4" = 1'-0"

PROPOSED SHEETING INSTALLATION SEQUENCE AT TUNNEL ENDS

1. LOCATE AND IDENTIFY ALL UTILITIES WITHIN CONSTRUCTION ZONE. ALL EXISTING UTILITIES SHALL BE PROTECTED THROUGHOUT THE DURATION OF CONSTRUCTION.
2. DRIVE INTERLOCKING SHEETING AS SHOWN ON SHEET S–117.
3. EXCAVATE SOIL BELOW ELEVATION 31.00 AS REQUIRED TO INSTALL WALER "A" AND ALL CORRESPONDING STRUTS/BRACES AT THIS ELEVATION, AS SHOWN ON SHEET S–117.
4. EXCAVATE SOIL BELOW ELEVATION 17.00 AS REQUIRED TO INSTALL WALER "B", "X", AND ALL STRUTS/BRACES LOCATED AT THIS ELEVATION, AS SHOWN ON SHEET S–117.
5. INSTALL "C" COLUMNS BETWEEN WALERS "A" AND "B".
6. INSTALL WALER "D" AND INCLINED "E" WALERS.
7. LOCALLY CUT SHEETING FOR PIPE ARCH INSTALLATION. A MAXIMUM OF THREE SHEET PILES MAY BE CUT AT ANY GIVEN TIME FOR INSTALLATION OF AN INDIVIDUAL PIPE. THE CUTTING OF ADDITIONAL SHEET PILES MAY ONLY PROCEED AFTER PREVIOUSLY CUT SHEET PILES HAVE BEEN WELDED TO NEWLY INSTALLED PIPES.
8. DRIVE SUPPORT PIPES UNDER THE TRACKS TO THE ADJACENT EXCAVATION PIT. AFTER EACH PIPE IS INSTALLED, CUT ENDS OF PIPE TO A DISTANCE OF 6" BEYOND THE FACE OF SHEETING. WELD CUT SHEET PILES ABOVE AND BELOW INSTALLED PIPE PRIOR TO PROCEEDING WITH INSTALLATION OF NEXT PIPE.
9. REPEAT STEPS 7 & 8 FOR THE INSTALLATION OF REMAINING ARCH SUPPORT PIPES UNTIL ELEVATION 17.00 IS REACHED. AT ELEVATION 17.00, WALER "X" MAY BE REMOVED BETWEEN "C" COLUMNS TO ENABLE INSTALLATION OF REMAINING PIPES. NOTE: AT ANY GIVEN POINT AFTER STEP 3, THE CONTRACTOR MAY CHOOSE TO EXCAVATE DEEPER THAN ELEVATION 17.00 TO AFFORD ADEQUATE EQUIPMENT ACCESS FOR PIPE INSTALLATION.

1' 0 1' 2' 4' 6' 8'
1/4" = 1'–0"

2' 0 2' 4' 8' 12' 16'
1/8" = 1'–0"

60% SUBMITTAL

CONTRACT NO:		REVISIONS			
PROJECT NO:		BY	NO	DATE	DESCRIPTION
	DATE:				
DESIGNED:					
DRAFTED:					
CHECKED:					
APPROVED:					

Gannett Fleming

VRE

VIRGINIA RAILWAY EXPRESS

ALEXANDRIA PEDESTRIAN TUNNEL

DISCIPLINE: STRUCTURAL SUPPORT OF EXCAVATION SECTIONS

DRAWING NO: S-306

LIST NO:

SCALE:

DATE ISSUED: 5/25/16

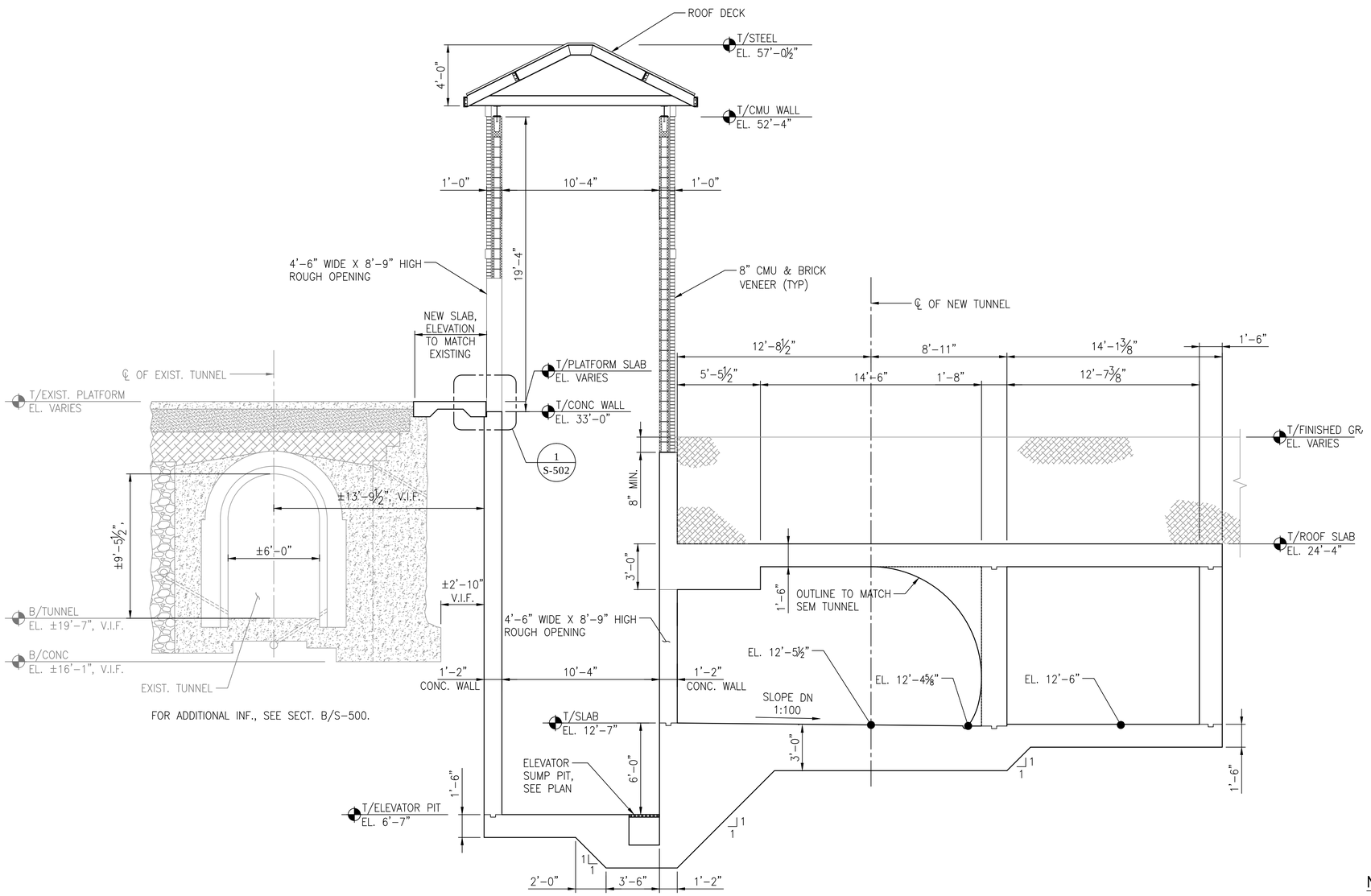

A
S-307

SECTION AT WEST ELEVATOR

SCALE: 1/4" = 1'-0"

NOTES:

1. FOR GENERAL NOTES, REFER TO DRAWINGS S-001 TO S-004.
2. FOR ELEVATOR ROOF FRAMING, SEE DRAWING S-402.
   FOR SUPPORT OF EXCAVATION PLAN, SEE DRAWING S-117.
3. THE (±) MARKS SHOWN WITH DIMENSION DO NOT INDICATE ANY DEGREE OF PRECISION. THESE DIMENSIONS WILL REQUIRE FIELD VERIFICATION BY THE CONTRACTOR. VERITY EXISTING TUNNEL INVERT AND EXISTING RETAINING FOUNDATION IN THE FIELD.

60% SUBMITTAL

CONTRACT NO:	REVISIONS				
PROJECT NO:	BY	NO	DATE	DESCRIPTION	
DATE:					
DESIGNED: IA					
DRAFTED: LTN					
CHECKED: MA/DB					
APPROVED:					

Gannett Fleming

VRE

VIRGINIA RAILWAY EXPRESS

ALEXANDRIA
PEDESTRIAN TUNNEL

DISCIPLINE:
STRUCTURAL
CUT AND COVER TUNNEL
SECTIONS

DRAWING NO: S-307

LIST NO:

SCALE: AS SHOWN

DATE ISSUED: 5/25/16

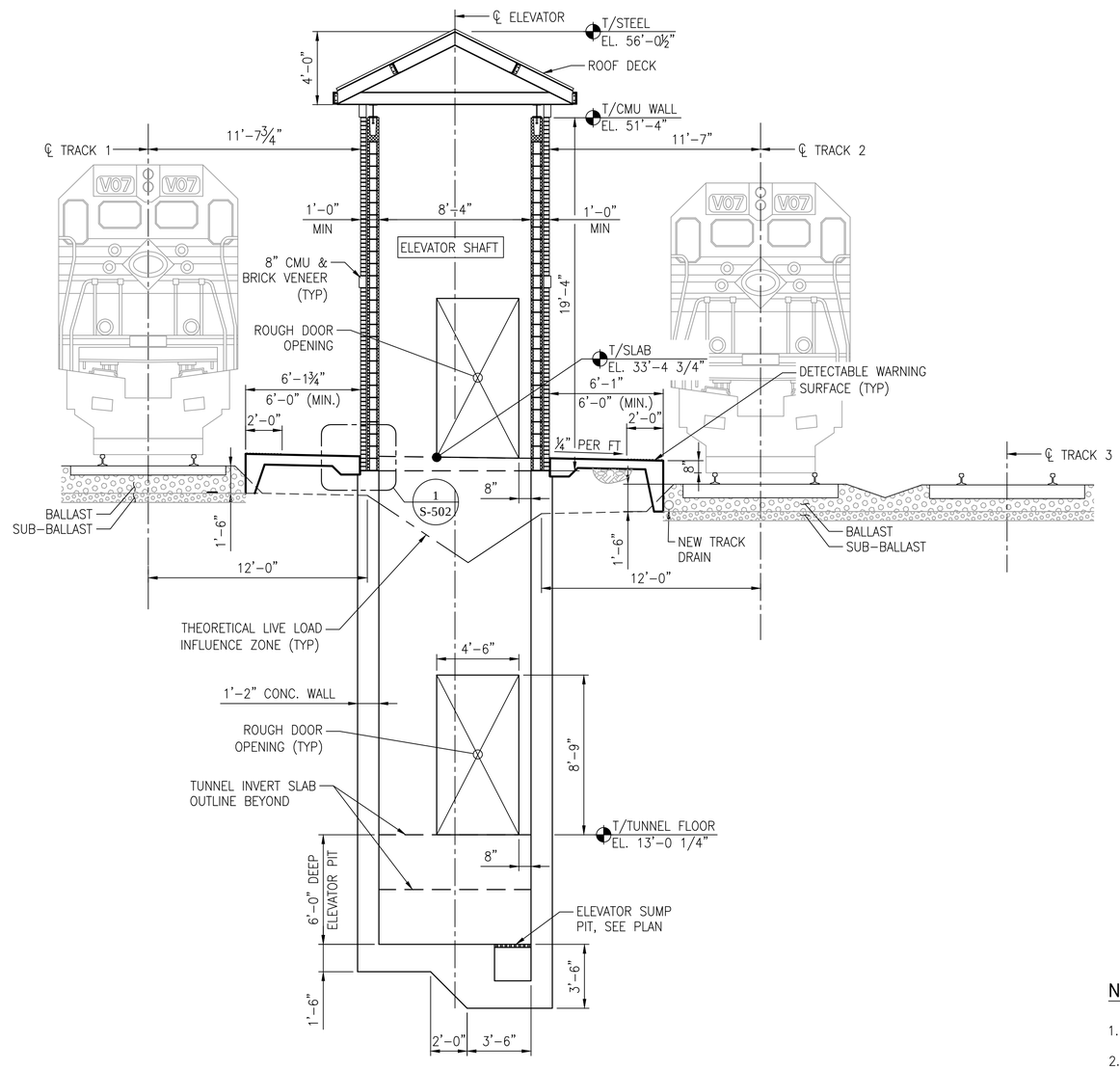

A
S-308

SECTION AT EAST ELEVATOR

SCALE: 1/4" = 1'-0"

NOTES:

1. FOR GENERAL NOTES, REFER TO DRAWINGS S-001 TO S-004.
2. FOR ELEVATOR ROOF PARTIAL PLAN, SEE DRAWING S-402.
3. OUTLINE OF BRICK VENEER FACE VARIES AROUND ELEVATOR SHAFT. FOR FINISHED FACE OUTLINE OF BRICK VENEER, REFER TO ARCHITECTURAL DRAWINGS.
4. FOR LIVE LOAD INFLUENCE ZONE PROFILE, SEE DRAWING S-305.

60% SUBMITTAL

CONTRACT NO:	REVISIONS				
PROJECT NO:	BY	NO	DATE	DESCRIPTION	
DATE:					
DESIGNED: IA					
DRAFTED: LTN					
CHECKED: MA/DB					
APPROVED:					

Gannett Fleming

VRE

VIRGINIA RAILWAY EXPRESS

ALEXANDRIA
PEDESTRIAN TUNNEL

DISCIPLINE: STRUCTURAL
EAST PLATFORM ELEVATOR SECTION

DRAWING NO: S-308

LIST NO:

SCALE: AS SHOWN

DATE ISSUED: 5/25/16

GENERAL NOTES

1. NOT ALL SYMBOLS DEPICTED ON THIS DRAWING ARE USED IN THE ARCHITECTURAL DRAWINGS.
2. ALL WORK TO CONFORM TO REQUIREMENTS OF THE GOVERNING BUILDING CODE, OSHA AND ALL OTHER APPLICABLE CODES, RULES, REGULATIONS, ORDINANCES, ETC. IN THEIR LATEST EDITION. ALL WORK SHALL CONFORM TO REQUIREMENTS OF ALL AUTHORITIES HAVING JURISDICTION.
3. ALL WORK THAT IS IMPLIED OR REASONABLY INFERRED BY THE DRAWINGS IS THE RESPONSIBILITY OF THE CONTRACTOR. THE CONTRACTOR'S ATTENTION IS DIRECTED TO INCLUDE ALL DRAWINGS COMPRISING THE COMPLETE SET. THE INCLUSION OF ANY AND ALL WORK BY MENTION, NOTATION, DETAIL, ITEMIZATION OR IMPLICATION, HOWEVER BRIEF, MEANS THAT THE CONTRACTOR SHALL PROVIDE AND INSTALL SAME AT NO ADDITIONAL COST OR BURDEN TO THE OWNER. ALL WORK PERFORMED SHALL INCLUDE ALL APPURTENANCES AND APPARATUS NORMALLY DEEMED TO BE PART OF A COMPLETE PACKAGE WITHIN THE DEFINITIONS OF ORDINARY INDUSTRY STANDARDS. ALL TRADES ARE RESPONSIBLE FOR REVIEWING THE ENTIRE SET OF DRAWINGS THEREBY NOTING AND INCLUDING THEIR WORK AS APPLICABLE. THE INTENT OF THE DRAWING SET IS TO RESULT IN A COMPLETE AND FINISHED PROJECT IN ALL REGARDS AT THE CONCLUSION OF THE WORK. CONTRACTOR TO INCLUDE ALL WORK, WHETHER SHOWN OR NOT, AS MAY BE NECESSARY TO ACCOMPLISH THE INTENDED RESULT.
4. ALL PERMITS, INSPECTIONS, APPROVALS, ETC. SHALL BE APPLIED AND PAID FOR BY THE CONTRACTOR. CONTRACTOR SHALL BE RESPONSIBLE FOR THE ARRANGING AND COORDINATING ALL REQUIRED INSPECTIONS AND FOR SECURING ALL NECESSARY APPROVALS OF THE WORK.
5. CONTRACTOR SHALL FAMILIARIZE THEMSELF WITH THE PROJECT THROUGH INSPECTION OF THE SITE AND REVIEW OF THE DRAWINGS SO AS TO THOROUGHLY UNDERSTAND THE NATURE AND REQUIREMENTS OF THE WORK. ANY AND ALL DISCREPANCIES OR OMISSIONS SHALL BE REPORTED TO THE OWNER PRIOR TO THE COMMENCEMENT OF ANY WORK AFFECTED BY SUCH DISCREPANCY OR OMISSION. IT IS THE RESPONSIBILITY OF THE CONTRACTOR TO ENSURE THAT DISCREPANCIES OR OMISSIONS ARE REPORTED AND CLARIFICATION OBTAINED PRIOR TO WORK BEING PERFORMED. ANY AND ALL WORK PROCEEDING OTHERWISE AND THEN FOUND TO BE INCORRECT OR INCONSISTENT WITH THE INTENDED RESULT SHALL BE REMOVED, REPLACED AND/OR CORRECTED BY THE CONTRACTOR AT NO ADDITIONAL COST OR BURDEN TO THE OWNER. CONTRACTOR TO VERIFY ALL DIMENSIONS AND LOCATIONS IN THE FIELD. CONTRACTOR TO COORDINATE ALL WORK WITH CONDITIONS ENCOUNTERED IN THE FIELD AND MAKE ALL NECESSARY ADJUSTMENTS ACCORDINGLY.
6. CONTRACTOR IS RESPONSIBLE FOR FINAL FIT, FINISH, APPEARANCE AND PERFORMANCE OF ALL WORK.
7. CONTRACTOR SHALL VERIFY ALL DIMENSIONS AND CONDITIONS AT THE WORK SITE PRIOR TO THE COMMENCEMENT OF WORK.
8. CONTRACTOR SHALL VERIFY EXISTING CONDITIONS AFFECTING THE WORK PRIOR TO BIDDING AND SHALL FAMILIARIZE HIMSELF WITH ALL ASPECTS OF THE WORK PRIOR TO COMMENCEMENT.
9. ALL MATERIALS SHALL BE APPLIED, INSTALLED OR UTILIZED IN ACCORDANCE WITH MANUFACTURER'S PRINTED LITERATURE.
10. ALL WORK SHALL BE PROPERLY AND ADEQUATELY PROTECTED FROM DAMAGE AT ALL TIMES REGARDLESS OF THE STAGE OF COMPLETION. CONTRACTOR SOLELY RESPONSIBLE FOR SAFETY AT ALL TIMES, IN ALL PLACES AND UNDER ALL CONDITIONS AFFECTING OR AFFECTED BY THE WORK. CONTRACTOR SHALL ADHERE TO ALL ACCEPTED SAFETY PRACTICES AND SHALL PROVIDE ALL FENCES, BARRICADES, GUARDRAILS, PARTITIONS, ETC. AS MAY BE NECESSARY IN ORDER TO PROTECT LIFE AND PROPERTY FROM INJURY OR DAMAGE AND AS MAY BE REQUIRED BY ANY AND ALL AUTHORITIES HAVING JURISDICTION. CONTRACTOR SHALL REPAIR ANY AND ALL DAMAGE TO THE PREMISES ARISING FROM OR ASSOCIATED WITH WORK SITE OPERATIONS AND/OR ACTIVITIES CONNECTED TO THE WORK.
11. CONTRACTOR TO PERFORM ALL WORK WITHOUT INTERFERING WITH OWNER'S NORMAL OPERATIONS.
12. DO NOT SCALE DRAWINGS FOR CONSTRUCTION PURPOSES.
13. ALL INTERIOR DOORS ARE 4" FROM FACE OF THE CLOSEST PERPENDICULAR WALL UNLESS NOTED OTHERWISE.

MATERIALS LEGEND

- BRICK
- CMU
- ACOUSTICAL CMU
- CMIU
- SGFT / GLAZED CMU
- CONCRETE
- GYP BD / GROUT
- BATT INSULATION
- RIGID INSULATION
- COARSE AGGREGATE /BALLAST
- STEEL
- ALUMINUM
- FINISH LUMBER
- DIMENSIONAL LUMBER
- SHIM
- PLYWOOD
- ACOUSTICAL PANEL
- TILE
- EARTH

SYMBOLS LEGEND

100 – DOOR NUMBER REFERENCE

STAIR 101 – ROOM NAME – ROOM NUMBER REFERENCE

L-1 – LINTEL TYPE REFERENCE

3 – DEMOLITION NOTE REFERENCE

2 / A-4 – DETAIL REFERENCE – FIRST DRAWING ON WHICH DETAIL APPEARS

1 / A-3 – SECTION/DETAIL DRAWING TITLE REFERENCE – FIRST DRAWING ON WHICH DRAWING APPEARS

– 1 HR FIRE RATED PARTITION

A – WALL TYPE

0.0 – COLUMN REFERENCE

D A B C A-1 – MULTIPLE INTERIOR ELEVATION REFERENCE – DRAWING ON WHICH ELEVATION APPEARS

A A-1 – SINGLE INTERIOR ELEVATION REFERENCE – DRAWING ON WHICH ELEVATION APPEARS

FEC – NEW FIRE EXTINGUISHER AND CABINET

– LARGE SCALE PLAN REFERENCE

ARCHITECTURAL ABBREVIATIONS

ABV	ABOVE
AC	AIR CONDITIONER
ACST	ACOUSTIC
ADDL	ADDITIONAL
ADJ	ADJACENT
AFF	ABOVE FINISH FLOOR
AGGR	AGGREGATE
AL	ALUMINUM
ALT	ALTERNATE
ARCH	ARCHITECTURAL
ASB	ASBESTOS
ASPH	ASPHALT
ASPHRS	ASPHALT ROOF SHINGLES
ASSN	ASSOCIATION
ASST	ASSISTANT
ASSY	ASSEMBLY
AVE	AVENUE
AVG	AVERAGE
B	BOTTOM
BALC	BALCONY
BD	BOARD
BETW	BETWEEN
BLDG	BUILDING
BLKG	BLOCKING
BLR	BOILER
BM	BEAM
BMK	BENCHMARK
BP	BASE PLATE
BRDG	BRIDGING
BRG	BEARING
BS	BOTH SIDES
BSMT	BASEMENT
CAB	CABINET
CAP	CAPACITY
CARP	CARPET
CB	CHALK BOARD
CER	CERAMIC
CER TILE	CERAMIC TILE
CI	CAST IRON
CIP	CAST-IRON PIPE
CJ	CONTROL JOINT
CL	CENTERLINE
CLG	CEILING
CLO	CLOSET
CLR	CLEAR
CMIU	CONCRETE MASONRY INSULATED UNIT
CMU	CONCRETE MASONRY UNIT
CNCL	CONCEALED
CO	CLEANOUT
COL	COLUMN
COMP	COMPOSITION
CONC	CONCRETE
CONSTR	CONSTRUCTION
CONT	CONTINUOUS
CONTR	CONTRACTOR
CRV	CURVED
CSK	COUNTERSINK
CTD	COATED
CTR	CENTER
CUH	CABINET UNIT HEATER
D	DEPTH
DBL	DOUBLE
DEG	DEGREE
DEPT	DEPARTMENT
DET	DETAIL
DGL	DIAGONAL
DIA	DIAMETER
DIM	DIMENSION
DIV	DIVISION
DL	DEAD LOAD
DMPF	DAMPPROOFING
DN	DOWN
DPM	DEMOUNTABLE PARTITION MANUFACTURER
DR	DOOR
DS	DOWNSPOUT
DW	DISHWASHER
DWG	DRAWING
E	EAST
EA	EACH
EGEN	EMERGENCY GENERATOR
EF	EXHAUST FAN
EIFS	EXTERIOR INSULATION & FINISH SYSTEM
EL	ELEVATION
ELEC	ELECTRICAL
ELEV	ELEVATOR
ENTR	ENTRANCE
EQ	EQUAL
EQUIP	EQUIPMENT
EWC	ELECTRIC WATER COOLER
EXH	EXHAUST
EXIST	EXISTING
EXP	EXPANSION
EXP JT	EXPANSION JOINT
EXP STR	EXPOSED STRUCTURE
EXT	EXTERIOR
FAB	FABRICATE
FBD	FIBERBOARD
FD	FLOOR DRAIN
FDN	FOUNDATION
FDR	FIRE DOOR
FE	FIRE EXTINGUISHER
FEC	FIRE EXTINGUISHER & CABINET
FHY	FIRE HYDRANT
FIN	FINISH
FL	FLASHING
FLEX	FLEXIBLE
FLG	FLANGE
FLR	FLOOR
FLRG	FLOORING
FP	FIREPROOF
FRP	FIBERGLASS-REINFORCED PLASTICS
FR	FIRE RATED
FT	FOOT
FTG	FOOTING
FURN	FURNITURE
GA	GAUGE
GALV	GALVANIZED
GAR	GARAGE
GEN	GENERATOR
GL	GLASS
GLU-LAM	GLUE-LAMINATED
GOVT	GOVERNMENT
GR	GRADE
GRD	GROUND
GVL	GRAVEL
GWB	GYPSUM WALLBOARD
GYP	GYPSUM
H	HIGH
HDWE	HARDWARE
HM	HOLLOW METAL
HMD	HOLLOW METAL DOOR
HORIZ	HORIZONTAL
HPT	HIGH POINT
HT	HEIGHT
HTR	HEATER
HVAC	HEATING, VENTILATING, & AIR CONDITIONING
ID	INSIDE DIAMETER
IE	THAT IS
IH	INTAKE HOOD
INSUL	INSULATION
INTR	INTERIOR
JST	JOIST
JT	JOINT
LAB	LABORATORY
LAM	LAMINATE
LAV	LAVATORY
LG	LENGTH
LH	LEFT HAND
LIB	LIBRARY
LIN	LINEAR
LL	LIVE LOAD
LLH	LONG LEG HORIZONTAL
LLV	LONG LEG VERTICAL
LPT	LOW POINT
LT	LIGHT
LWC	LIGHTWEIGHT CONCRETE
MAINT	MAINTENANCE
MAS	MASONRY
MATL	MATERIAL
MAX	MAXIMUM
MECH	MECHANICAL
MEMB	MEMBRANE
MEZZ	MEZZANINE
MFR	MANUFACTURER
MGR	MANAGER
MH	MANHOLE
MIL	MILITARY
MIN	MINIMUM
MISC	MISCELLANEOUS
ML	METAL LATH
MTL	METAL
MLDG	MOLDING
MLCB	MUSIC LINE CHALK BOARD
MO	MASONRY OPENING
MR	MOISTURE RESISTANT
MTG	MOUNTING
N	NORTH
NA	NOT APPLICABLE
NIC	NOT IN CONTRACT
NO	NUMBER
NRC	NOISE-REDUCTION COEFFICIENT
NTS	NOT TO SCALE
OA	OVERALL
OC	ON CENTER
OD	OUTSIDE DIAMETER
OFF	OFFICE
OH	OPPOSITE HAND
OHDR	OVERHEAD DOOR
OPNG	OPENING
OPP	OPPOSITE
OSB	ORIENTED STRAND BOARD
P/L	PROPERTY LINE
PASS	PASSENGER
PERF	PERFORATED
PL	PLATE
PLAS	PLASTER
PLBG	PLUMBING
PLYWD	PLYWOOD
PNL	PANEL
PNT	PAINT
PORC	PORCELAIN
PR	PAIR
PREFAB	PREFABRICATED
PROJ	PROJECT
PSF	POUNDS PER SQUARE FOOT
PSI	POUNDS PER SQUARE INCH
PT	POINT
PTD	PAINTED
PTN	PARTITION
PVC	POLYVINYL CHLORIDE
QTF	QUARRY-TILE FLOOR
R	RISER
RAD	RADIUS
RD	ROOF DRAIN
REFR	REFRIGERATOR
REINF	REINFORCE
REQD	REQUIRED
RET	RETURN
REV	REVISION
REG	REGISTER
RFG	ROOFING
RH	RIGHT HAND
RM	ROOM
RWC	RAIN WATER CONDUCTOR
S	SOUTH
SAPC	SUSPENDED ACOUSTICAL PANEL CEILING
SCHED	SCHEDULE
SDG	SIDING
SEC	SECTION
SF	SQUARE FOOT
SGFT	STRUCTURAL GLAZED FACING TILE
SH	SHOWER
SHM	SECURITY HOLLOW METAL
SHT	SHEET
SI	INTERNATIONAL SYSTEM OF UNITS
SIM	SIMILAR
SKY	SKYLIGHT
SLDR	SLIDING DOOR
SOG	SLAB ON GRADE
SMLS	SEAMLESS
SPEC	SPECIFICATION
SPKLR	SPRINKLER
SPKR	SPEAKER
SQ	SQUARE
SS	STAINLESS STEEL
STD	STANDARD
STL	STEEL
STOR	STORAGE
STRUCT	STRUCTURE/STRUCTURAL
STWY	STAIRWAY
SUPT	SUPERINTENDENT
SUPVR	SUPERVISOR
SURF	SURFACE
SUSP	SUSPENDED/SUSPENSION
SYS	SYSTEM
T	TREAD
T/	TOP OF
T&B	TOP AND BOTTOM
TB	TACK BOARD
TAN	TANGENT
TDD	TELECOMMUNICATION DISPLAY DEVICE
TEL	TELEPHONE
TEMP	TEMPORARY
TER	TERRAZZO
T&G	TONGUE AND GROOVE
THRU	THROUGH
TLT	TOILET
TRTD	TREATED
TYP	TYPICAL
UNO	UNLESS NOTED OTHERWISE
VAT	VINYL ASBESTOS TILE
VCT	VINYL COMPOSITION TILE
VERT	VERTICAL
VIF	VERIFY IN FIELD
VTR	VENT THRU ROOF
W	WIDE
W/	WITH
W/O	WITHOUT
WBD	WALLBOARD
WC	WATER CLOSET
WD	WOOD
WDR	WOOD DOOR
WH	WATER HEATER
WTRPRF	WATERPROOFING
WWF	WELDED WIRE FABRIC
XFMR	TRANSFORMER

60% SUBMITTAL

CONTRACT NO:	
PROJECT NO:	
DATE:	
DESIGNED: DRE	
DRAFTED: DRE	
CHECKED: JRS	
APPROVED:	

REVISIONS

BY	NO	DATE	DESCRIPTION

Gannett Fleming

VRE

VIRGINIA RAILWAY EXPRESS

ALEXANDRIA PEDESTRIAN TUNNEL

DISCIPLINE: ARCHITECTURAL GENERAL NOTES, LEGENDS AND ABBREVIATIONS

SCALE: NONE

DATE ISSUED: 5/25/16

DRAWING NO: A-001

LIST NO:

CODE INFORMATION:

1. APPLICABLE CODES

BUILDING CODE:	2012 VIRGINIA UNIFORM CONSTRUCTION CODE
PLUMBING CODE:	2012 INTERNATIONAL PLUMBING CODE
ELECTRICAL CODE:	2011 NATIONAL ELECTRICAL CODE (NFPA 70)
MECHANICAL CODE:	2012 INTERNATIONAL MECHANICAL CODE
ENERGY SUBCODE:	2012 INTERNATIONAL ENERGY CONSERVATION CODE
FIRE ALARM CODE:	2013 NFPA 72 NATIONAL FIRE ALARM CODE
FIRE PREVENTION CODE:	2014 NFPA 130 STANDARD FOR FIXED GUIDEWAY TRANSIT AND PASSENGER RAIL SYSTEMS
ACCESSIBILTY CODE:	ACCESSIBILE AND USEABLE BUILDINGS AND FACILITIES – ICC A117.1–2009

2. BUILDING DESCRIPTION (IBC TABLE 503):

CONSTRUCTION TYPE:	2B
USE GROUP:	U (UTILITY)
ALLOWABLE TABULAR AREA:	35,500 SF
ACTUAL AREA:	
EAST PLATFORM AREA:	15,836 SF
CANOPY (INCLUDED IN PLATFORM AREA):	6,900 SF
ALLOWABLE HEIGHT:	5 STORY
ACTUAL HEIGHT: CANOPY	1 STORY

3. PLATFORM OCCUPANCY CALCULATION (NFPA 130):

AREA NAME	OCCUPANT LOAD
EAST PLATFORM	1194

4. OCCUPANCY AND EGRESS:

NUMBER OF OCCUPANTS:	
ENTRAINING LOAD	
TRACK 1:	19
TRACK 2:	95
DETRAINING LOAD:	1080
TOTAL EAST PLATFORM OCCUPANCY:	1194
SAFE DISPERSAL AREA:	398
REQUIRED AREA: 5 SF/PERSON (STANDING)xOCC. =	1,990 SF
NEW STAIR:	424
EXISTING STAIR:	372
TOTAL STAIR LOAD:	796
MINIMUM REQUIRED STAIR WIDTH:	
(OCC./4 MINUTES/1.41people/inch/minute):	142 INCHES
TOTAL STAIR WIDTH PROVIDED:	150 INCHES
MAXIMUM TRAVEL DISTANCE ON PLATFORM:	325 FT
LONGEST ROUTE ON PLATFORM:	240 FT

5. EVACUATION TIME:

MAXIMUM TRAVEL SPEED ALONG PLATFORM = 124 FT/MIN.
MAXIMUM TRAVEL SPEED FOR STAIRS = 48 FT/MIN.
TEST 1: EVACUATE PLATFORM IN 4 MINUTES OR LESS
150 in. x 1.41 = 211.5
796 people / 211.5 = 3.77 minutes
PLATFORM EVACUATION TIME: 3.77 MINUTES; PASS
TEST 2: EVACUATE STATION TO POINT OF SAFETY IN 6 MINUTES OR LESS
240 FT. / 124 = 1.94~
44 FT. / 48 = .92~ ; 1.94 + .92 = 2.86
STATION EVACUATION TIME: 2.86 MINUTES; PASS

EGRESS LEGEND

- (1194) OCCUPANT LOAD AT PLATFORM
- (398) OCCUPANT LOAD AT EXIT DISCHARGE
- PATH OF EGRESS FOR TRAVEL DISTANCE
- MOST REMOTE POINT ON PLATFORM
- EXISTING ACCESSIBLE ROUTE REMAINS OPEN DURING CONSTRUCTION
- PROPOSED ACCESSIBLE ROUTE

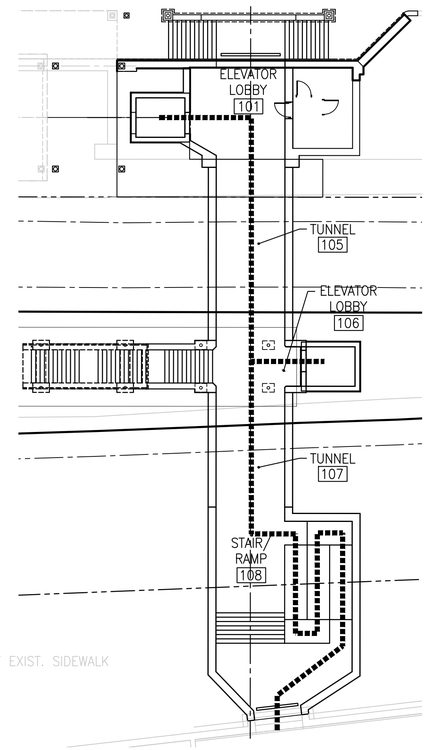

2 A-001 TUNNEL LEVEL PLAN
SCALE: 1/16" = 1'-0"

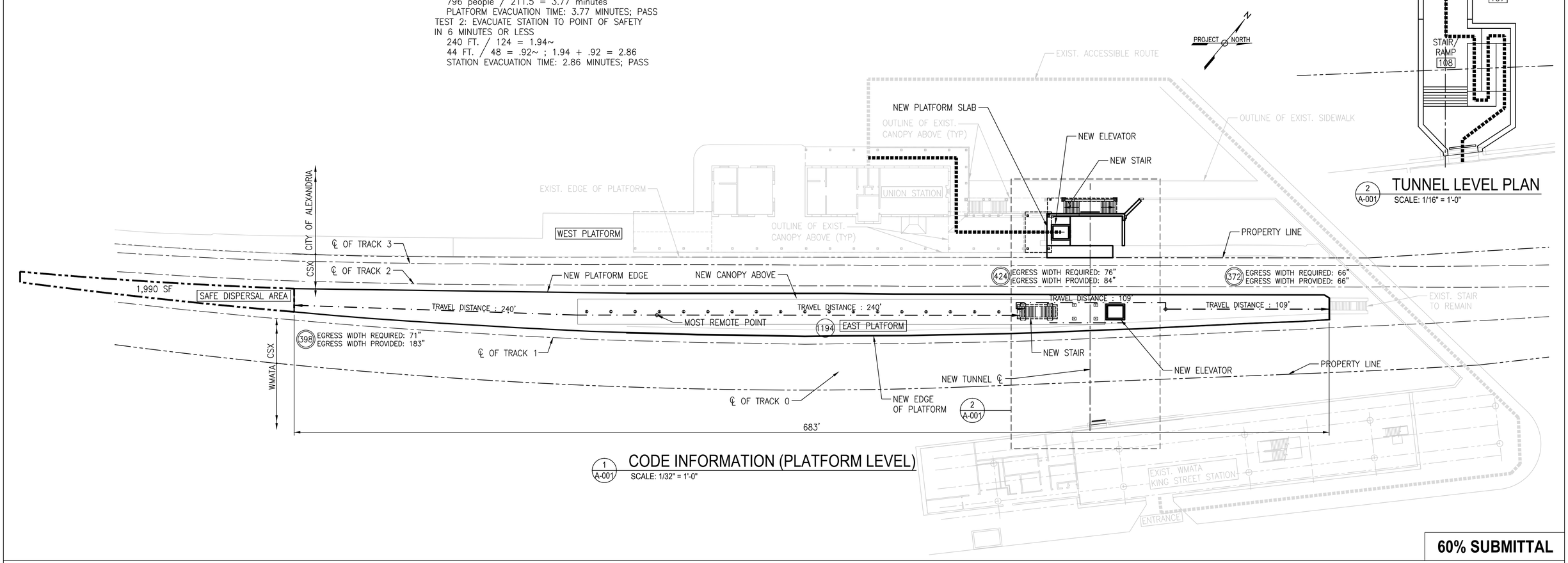

1 A-001 CODE INFORMATION (PLATFORM LEVEL)
SCALE: 1/32" = 1'-0"

60% SUBMITTAL

CONTRACT NO:	REVISIONS				
PROJECT NO:	BY	NO	DATE	DESCRIPTION	
DATE:					
DESIGNED: IA					
DRAFTED: LTN					
CHECKED: MA/DB					
APPROVED:					

Gannett Fleming

VRE

VIRGINIA RAILWAY EXPRESS

ALEXANDRIA
PEDESTRIAN TUNNEL

DISCIPLINE: ARCHITECTURAL
CODE INFORMATION AND LIFE SAFETY PLAN

SCALE: AS SHOWN

DATE ISSUED: 5/25/16

DRAWING NO: A-002

LIST NO:

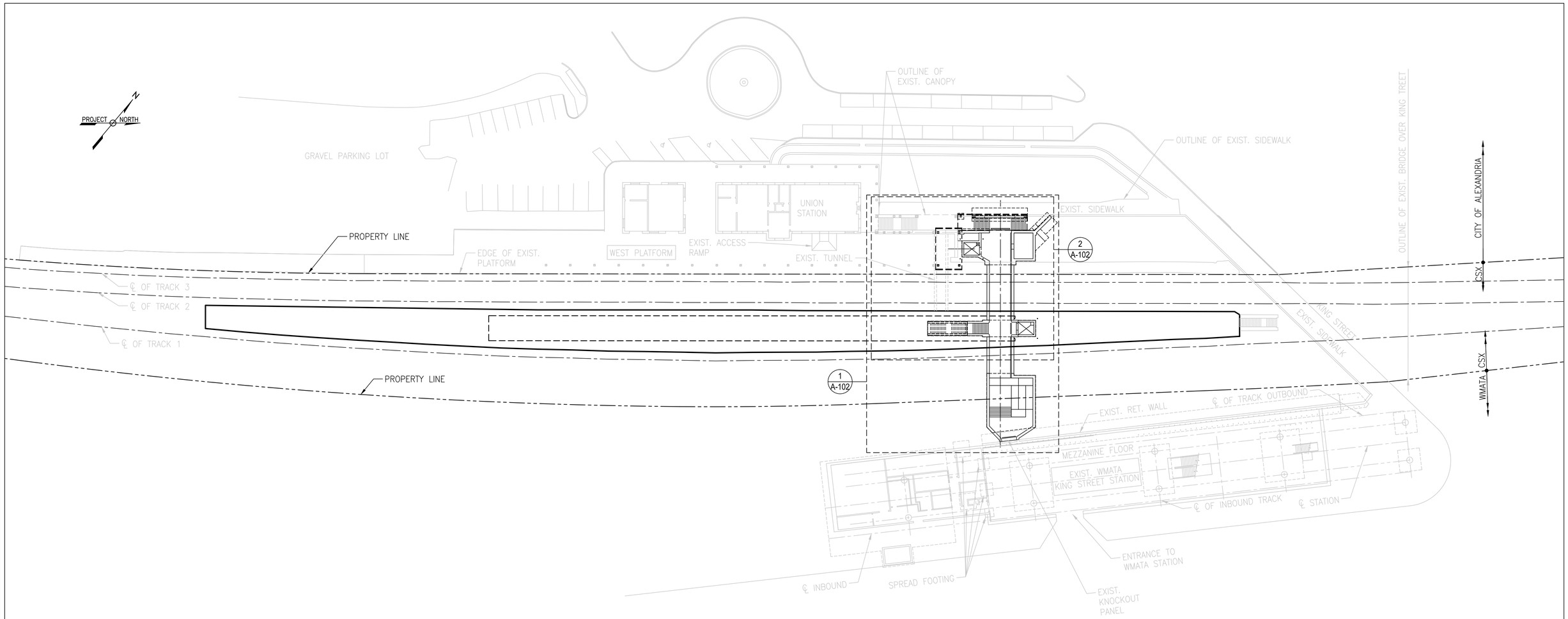

1 A-100 ARCHITECTURAL KEY PLAN
SCALE: 1/32" = 1'-0"

NOTES:

1. FOR GENERAL NOTES, REFER TO DRAWING A–001.

60% SUBMITTAL

CONTRACT NO:		REVISIONS			
PROJECT NO:		BY	NO	DATE	DESCRIPTION
	DATE:				
DESIGNED: DRE					
DRAFTED: DRE					
CHECKED: JRS					
APPROVED:					

Gannett Fleming

VRE

VIRGINIA RAILWAY EXPRESS

ALEXANDRIA
PEDESTRIAN TUNNEL

DISCIPLINE: ARCHITECTURAL KEY PLAN

SCALE: 1/32" = 1'–0"

DATE ISSUED: 5/25/16

DRAWING NO: A-100

LIST NO:

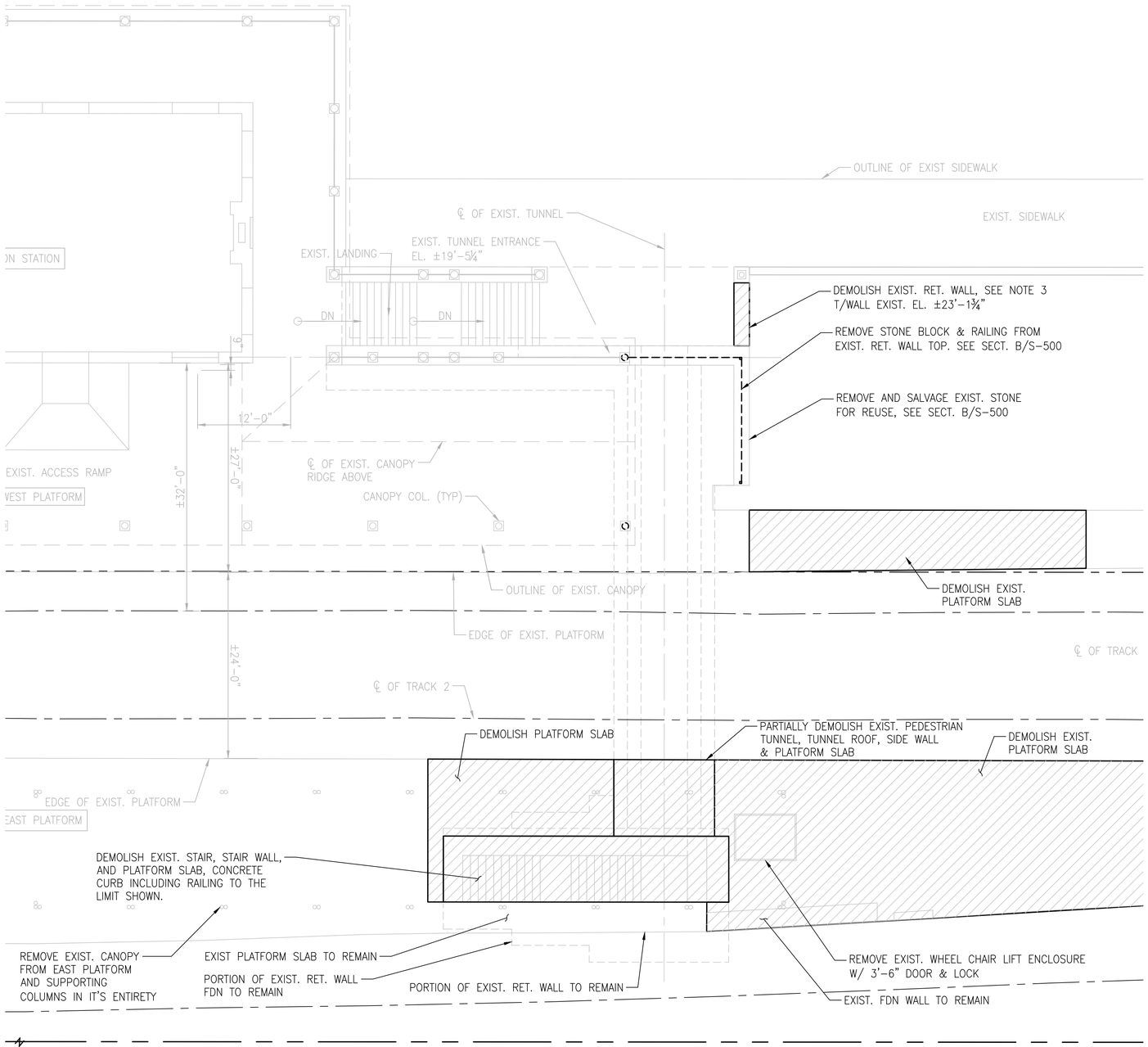

1
A-101

PARTIAL PLAN - DEMOLITION

SCALE: 1/8" = 1'-0"

GENERAL DEMOLITON NOTES:

1. FOR DEMOLITION RELATED TO OTHER DISCIPLINES, SEE INDIVIDUAL DISCIPLINE DRAWINGS.
2. VERIFY EXISTING CONDITIONS AND FIELD CONDITIONS.
3. PRIOR TO DEMOLITION, VERIFY MATERIALS AND EQUIPMENT TO BESALVAGED.
4. VERIFY AND MARK ALL UTILITIES PRIOR TO THE START OF WORK.
5. REMOVE ALL RUBBISH AND DEMOLITION DEBRIS FROM THE SITE AND DISPOSE OF IN A LAWFUL MANNER.
6. COORDINATE GENERAL CONSTRUCTION DEMOLITION WITH THE MECHANICAL, PLUMBING, AND ELECTRICAL DEMOLITION WORK.
7. PROVIDE TEMPORARY LINTELS OR STRUCTURAL SUPPORT FOR OPENINGS CREATED BY THE DEMOLITION.
8. WORK AND MAINTAIN SUCH SUPPORTS UNTIL PERMANENT STRUCTURAL SUPPORTS ARE INSTALLED.
9. PROVIDE TEMPORARY STRUCTURAL SUPPORT FOR WALLS AND ROOFS AS REQUIRED DURING DEMOLITION WORK AND MAINTAIN SUCH SUPPORTS UNTIL PERMANENT STRUCTURAL SUPPORTS ARE INSTALLED.
10. REPAIR ALL EXISTING STRUCTURES, UTILITIES, AND EQUIPMENT, SCHEDULED TO REMAIN, WHICH ARE DAMAGED DURING DEMOLITION OPERATIONS.
11. ALL WORK SCHEDULED TO BE DEMOLISHED, WILL BE REMOVED COMPLETLY INCLUDING ALL FASTENERS, ATTACHMENTS, ACCESSORIES, OR ANY RELATED WORK.
12. DEMOLITION INCLUDES ALL ITEMS WHETHER OR NOT SHOWN ON THE DRAWINGS, THAT ARE REQUIRED TO BE REMOVED IN ORDER TO INSTALL THE NEW WORK SHOWN ON DRAWINGS AND OTHER PORTIONS OF THE CONTRACT DOCUMENTS.
13. IT IS THE CONTRACTORS RESPONSIBILITY TO COORDINATE DEMOLITION IN CONNECTION WITH NEW WORK. ANY DEMOLITION REMOVED AND NOT REQUIRED TO BE PART OF NEW CONSTRUCTION WILL BE REPLACED AT NO ADDITIONAL COST TO THE OWNER.

60% SUBMITTAL

CONTRACT NO:	REVISIONS				
PROJECT NO:	BY	NO	DATE	DESCRIPTION	
DATE:					
DESIGNED:					
DRAFTED: DRE					
CHECKED:					
APPROVED:					

Gannett Fleming

VRE

VIRGINIA RAILWAY EXPRESS

ALEXANDRIA
PEDESTRIAN TUNNEL

DISCIPLINE: ARCHITECTURAL DEMOLITION PLAN

DRAWING NO: A-101

LIST NO:

SCALE: 1/8" = 1'-0"

DATE ISSUED: 5/25/16

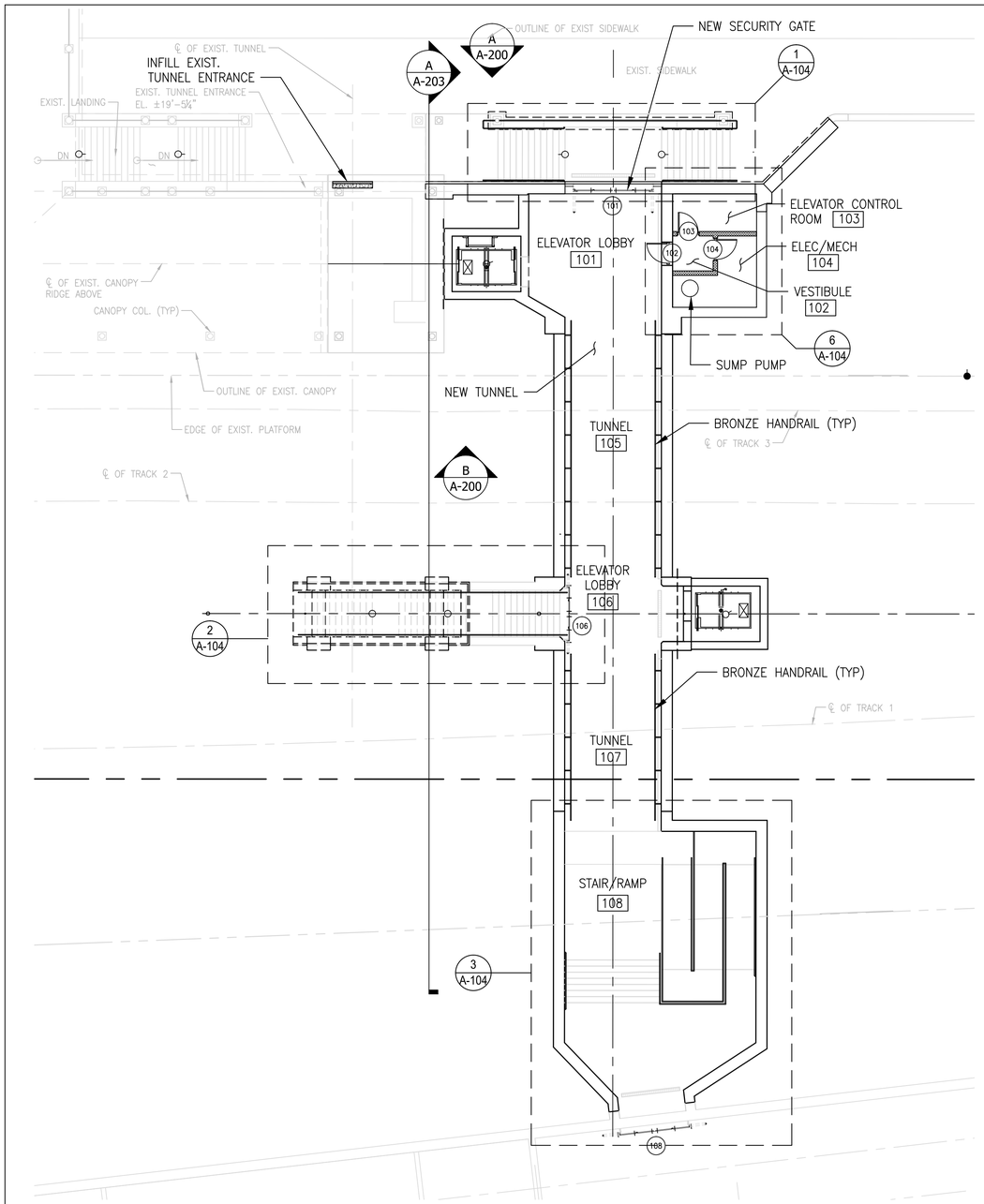

1 A-102 PARTIAL PLAN - TUNNEL LEVEL
SCALE: 3/32" = 1'-0"

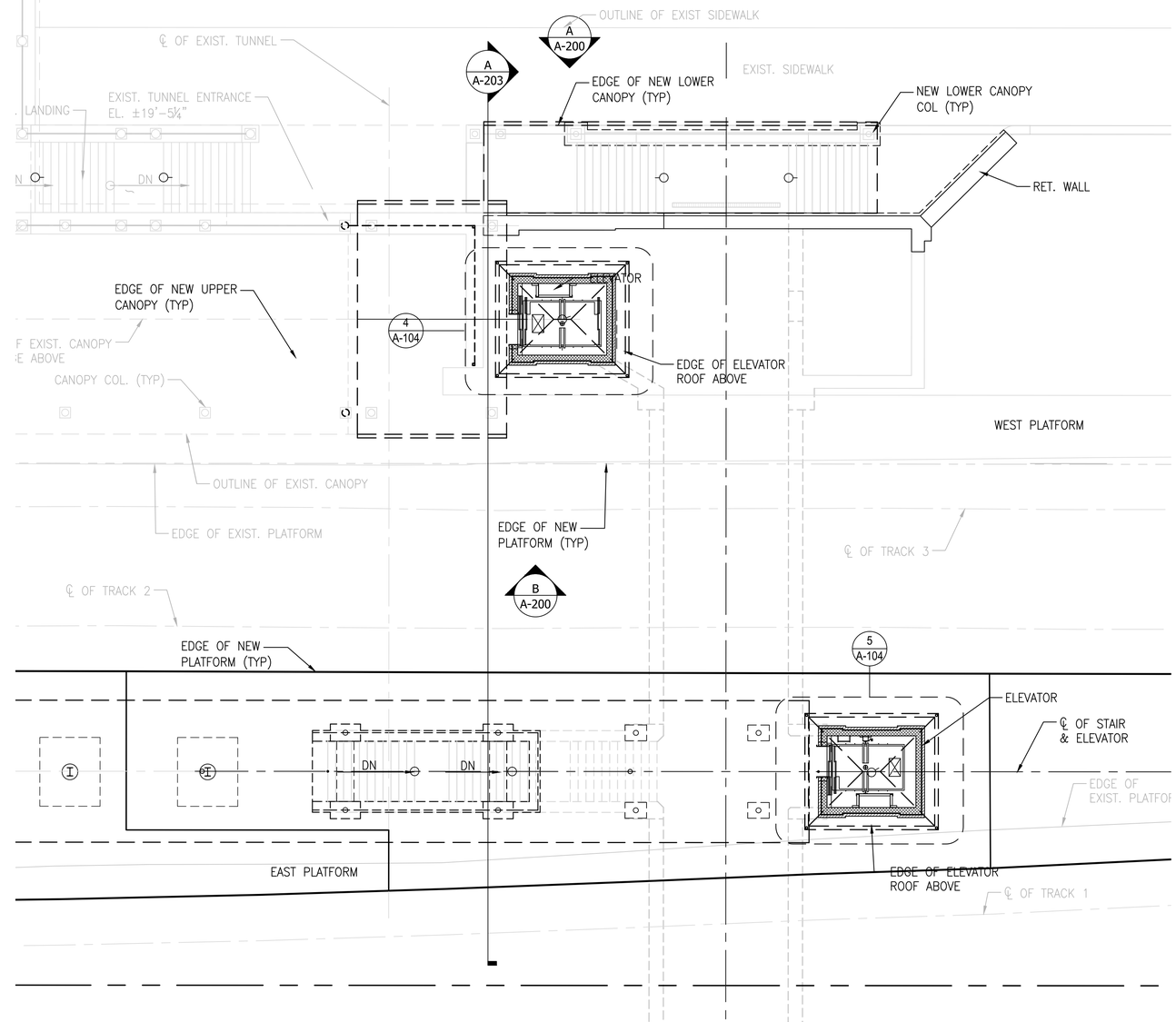

2 A-102 PARTIAL PLAN - PLATFORM LEVEL
SCALE: 1/8" = 1'-0"

PROJECT NORTH

60% SUBMITTAL

CONTRACT NO:		REVISIONS			
PROJECT NO:		BY	NO	DATE	DESCRIPTION
	DATE:				
DESIGNED:					
DRAFTED: DRE					
CHECKED:					
APPROVED:					

Gannett Fleming

VRE

VIRGINIA RAILWAY EXPRESS

ALEXANDRIA PEDESTRIAN TUNNEL

DISCIPLINE: ARCHITECTURAL ELEVATORS AND TUNNEL PLANS

DRAWING NO: A-102

LIST NO:

SCALE: AS SHOWN

DATE ISSUED: 5/25/16

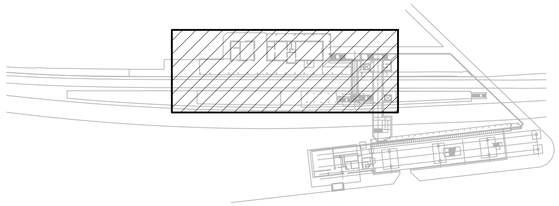

KEY PLAN
SCALE: 1/128" = 1'-0"

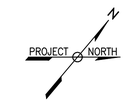

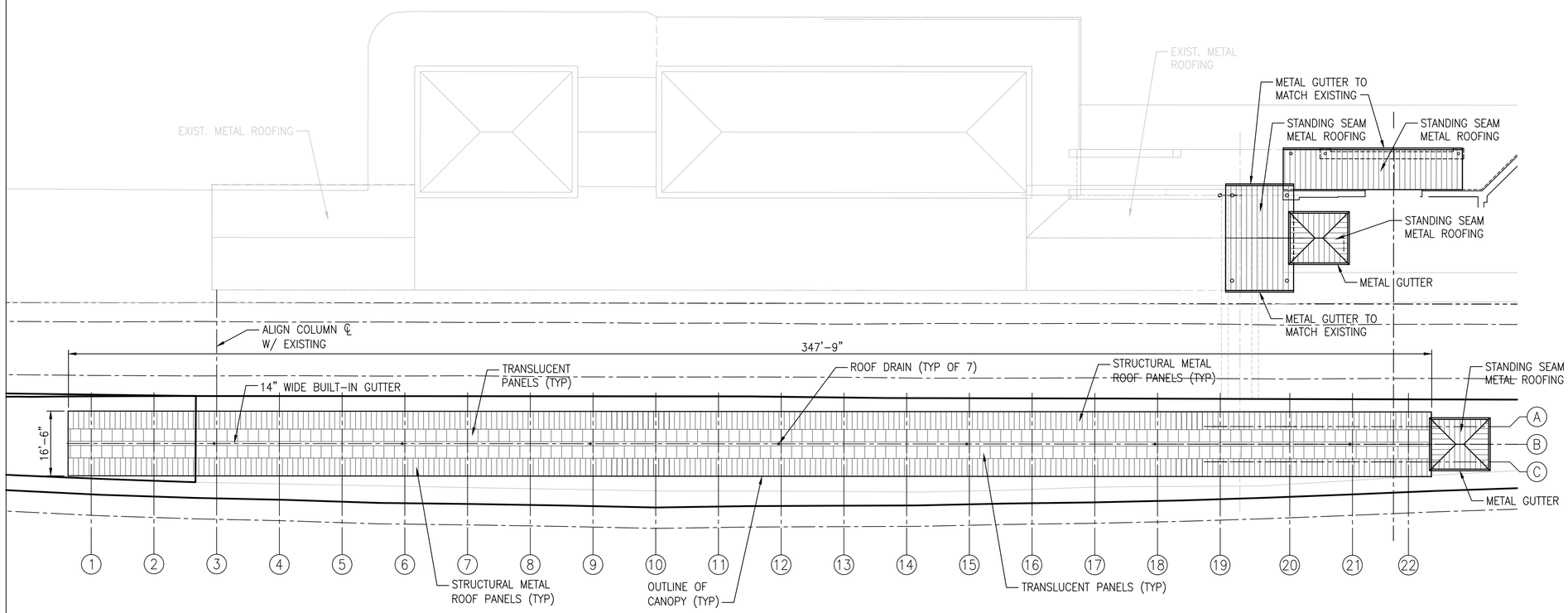

1 / A-103 CANOPY AND ELEVATOR ROOF PLAN
SCALE: 1/16" = 1'-0"

NOTES:

1. FOR GENERAL NOTES, REFER TO DRAWING A-001.

60% SUBMITTAL

CONTRACT NO:	REVISIONS				
PROJECT NO:	BY	NO	DATE	DESCRIPTION	
DATE:					
DESIGNED: JRS					
DRAFTED: DRE					
CHECKED: JRS					
APPROVED:					

Gannett Fleming

VRE

VIRGINIA RAILWAY EXPRESS

ALEXANDRIA
PEDESTRIAN TUNNEL

DISCIPLINE: ARCHITECTURAL CANOPY ROOF PLAN

DRAWING NO: A-103

LIST NO:

SCALE: 1/16" = 1'-0"

DATE ISSUED: 5/25/16

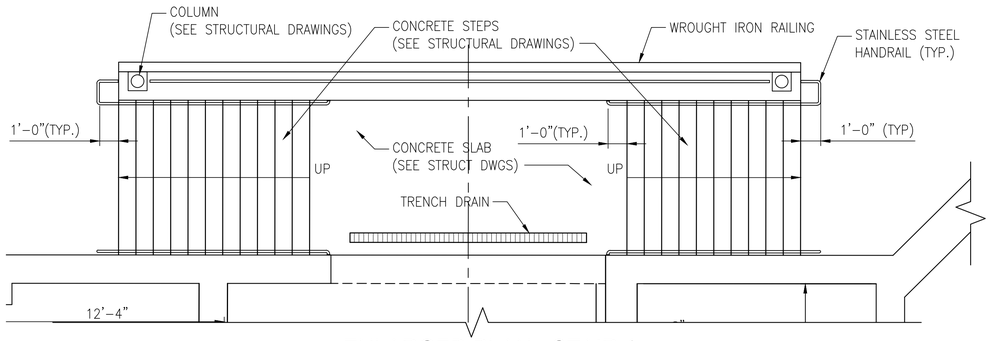

1 A-104 ENLARGED PLAN - STAIR 1
SCALE: 1/4" = 1'-0"

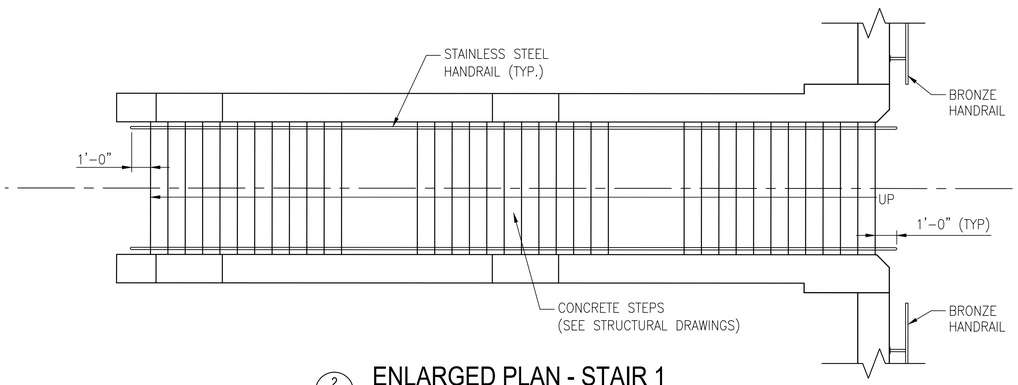

2 A-104 ENLARGED PLAN - STAIR 1
SCALE: 1/4" = 1'-0"

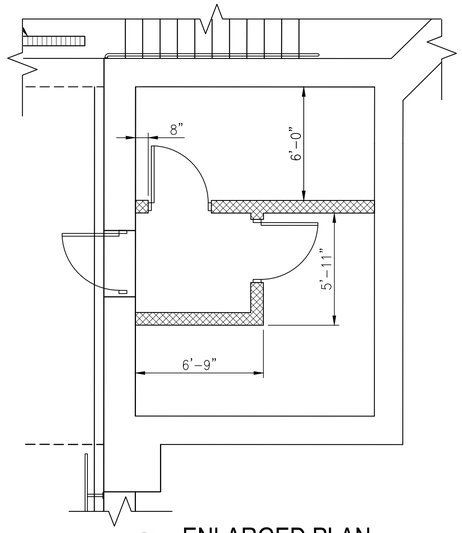

6 A-104 ENLARGED PLAN
SCALE: 1/4" = 1'-0"

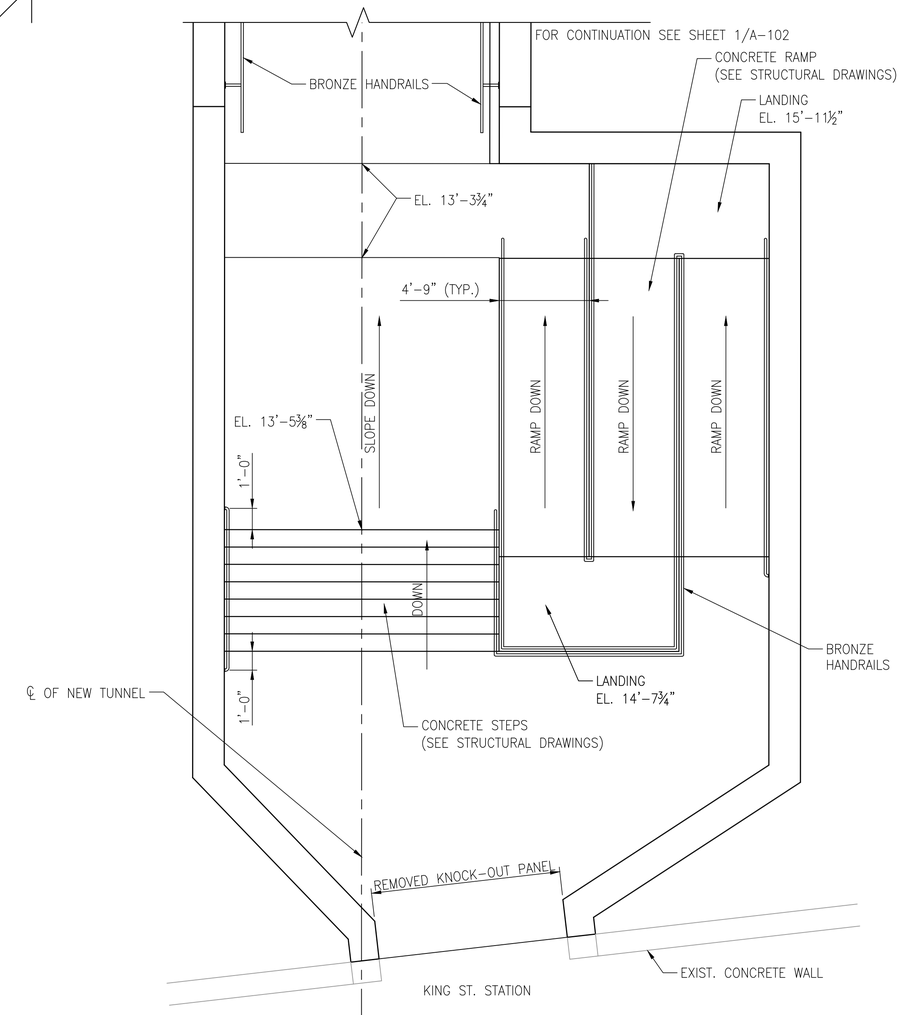

3 A-104 ENLARGED PLAN - STAIR / RAMP 108
SCALE: 1/4" = 1'-0"

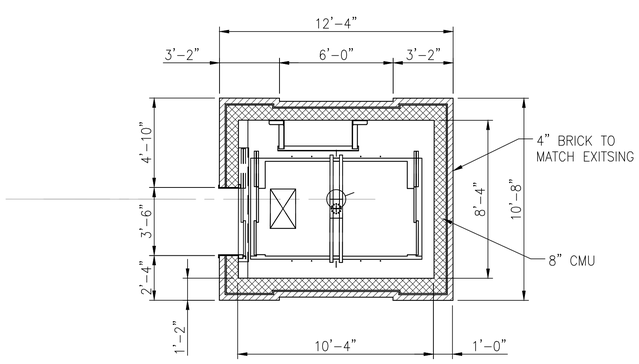

4 A-104 ENLARGED PLAN - ELEVATOR 1
SCALE: 1/4" = 1'-0"

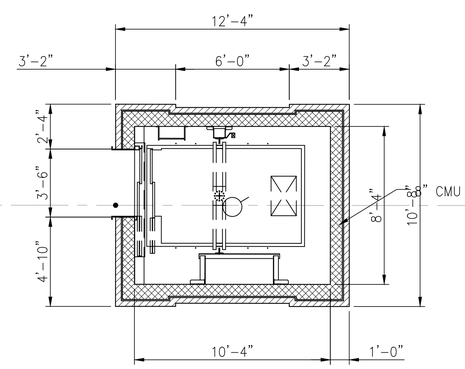

5 A-104 ENLARGED PLAN - ELEVATOR 2
SCALE: 1/4" = 1'-0"

PROJECT NORTH

60% SUBMITTAL

CONTRACT NO:		REVISIONS			
PROJECT NO:		BY	NO	DATE	DESCRIPTION
	DATE:				
DESIGNED:					
DRAFTED: DRE					
CHECKED:					
APPROVED:					

Gannett Fleming

VRE

VIRGINIA RAILWAY EXPRESS

ALEXANDRIA
PEDESTRIAN TUNNEL

DISCIPLINE:		DRAWING NO:
ARCHITECTURAL ENLARGED PLANS		A-104
SCALE: AS SHOWN	DATE ISSUED: 5/25/16	LIST NO:

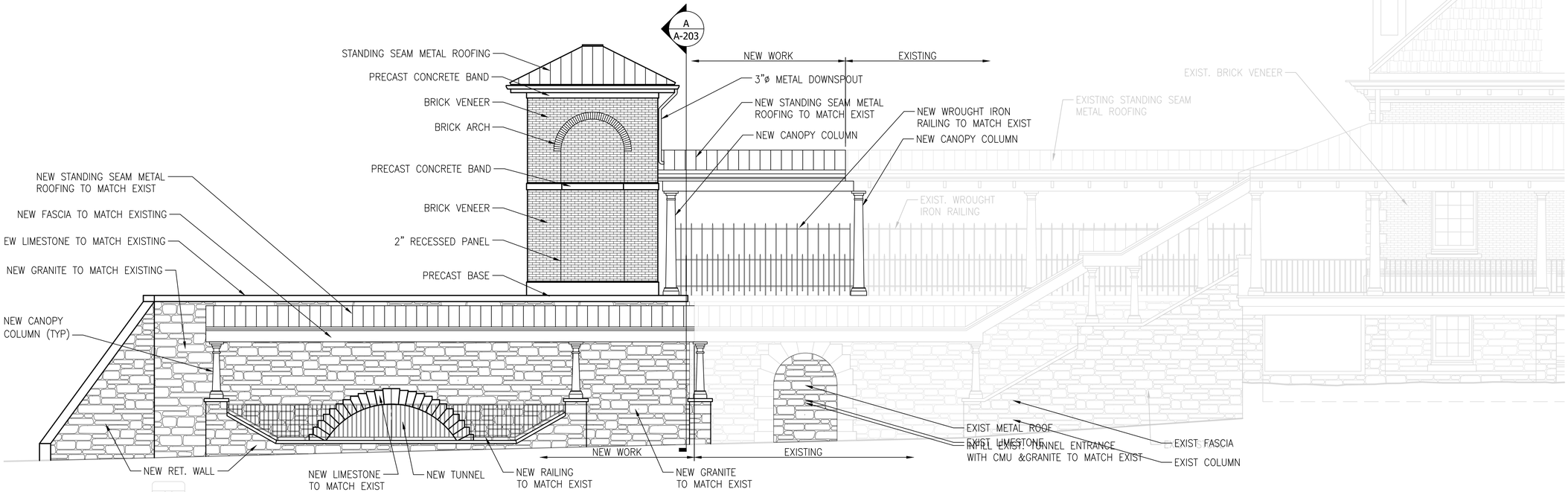

A A-200 CANOPY ELEVATION
SCALE: 3/16" = 1'-0"

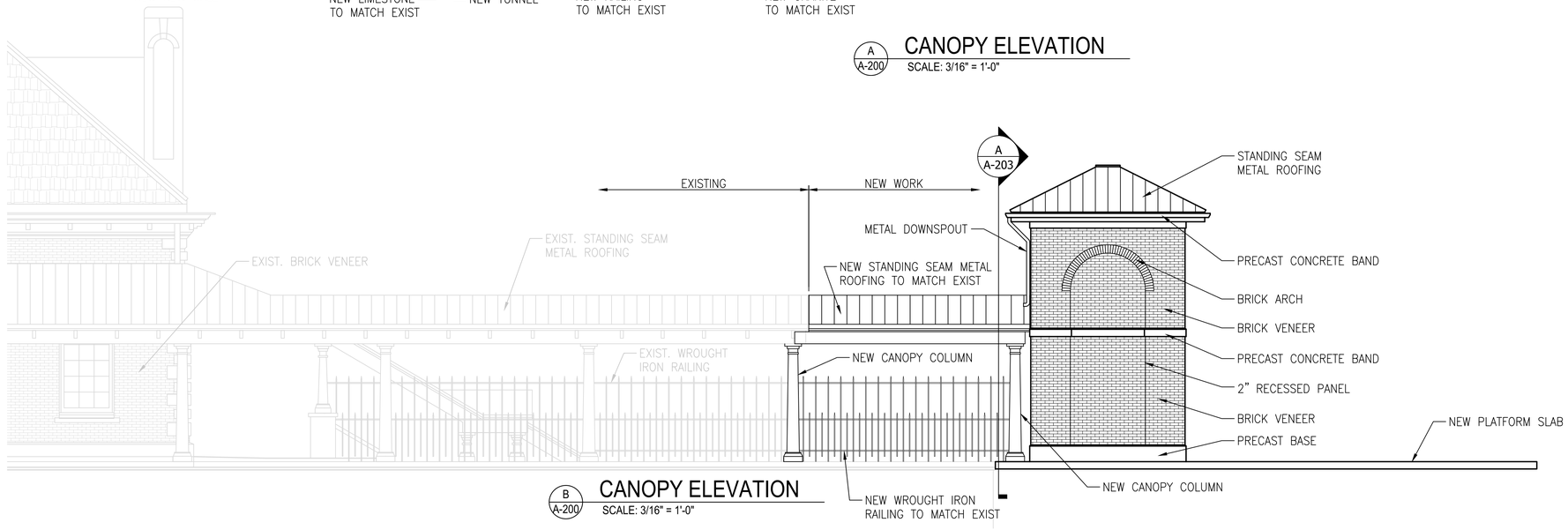

B A-200 CANOPY ELEVATION
SCALE: 3/16" = 1'-0"

60% SUBMITTAL

CONTRACT NO:	REVISIONS				
PROJECT NO:	BY	NO	DATE	DESCRIPTION	
DATE:					
DESIGNED:					
DRAFTED: LTN					
CHECKED:					
APPROVED:					

Gannett Fleming

VRE

VIRGINIA RAILWAY EXPRESS

ALEXANDRIA
PEDESTRIAN TUNNEL

DISCIPLINE: ARCHITECTURAL CANOPY ELEVATIONS

DRAWING NO: A-200

LIST NO:

SCALE: 3/16" = 1'-0"

DATE ISSUED: 5/25/16

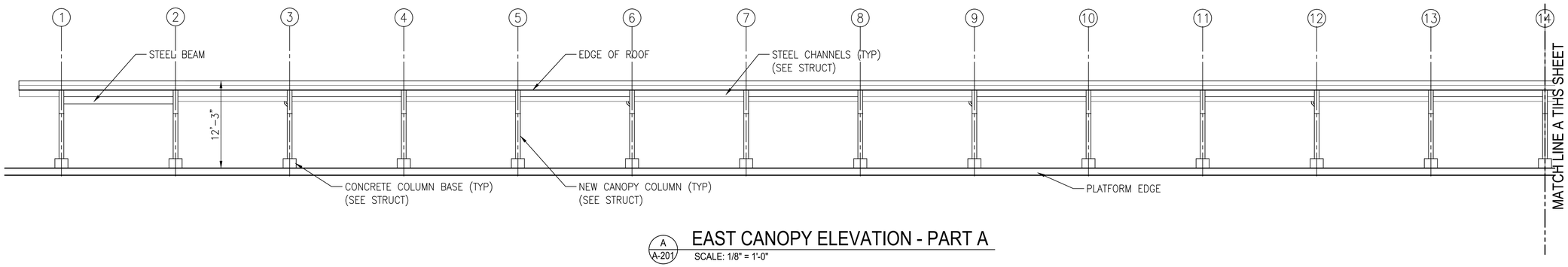

A / A-201 EAST CANOPY ELEVATION - PART A

SCALE: 1/8" = 1'-0"

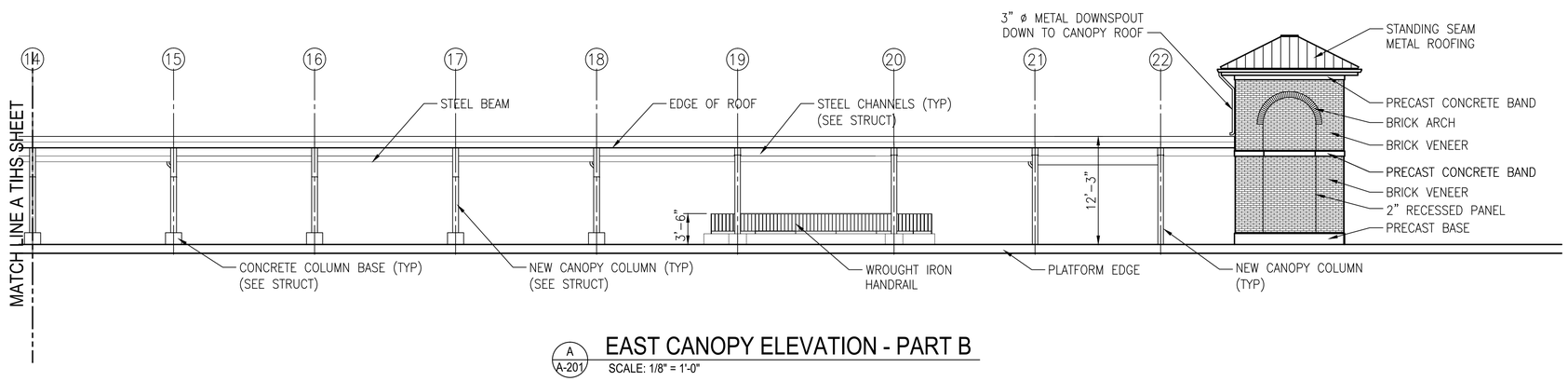

A / A-201 EAST CANOPY ELEVATION - PART B

SCALE: 1/8" = 1'-0"

60% SUBMITTAL

CONTRACT NO:	REVISIONS				
PROJECT NO:	BY	NO	DATE	DESCRIPTION	
DATE:					
DESIGNED:					
DRAFTED: LTN					
CHECKED:					
APPROVED:					

Gannett Fleming

VRE

VIRGINIA RAILWAY EXPRESS

ALEXANDRIA
PEDESTRIAN TUNNEL

DISCIPLINE:
ARCHITECTURAL
EAST CANOPY ELEVATION

DRAWING NO: A-201

LIST NO:

SCALE: 1/8" = 1'-0"

DATE ISSUED: 5/25/16

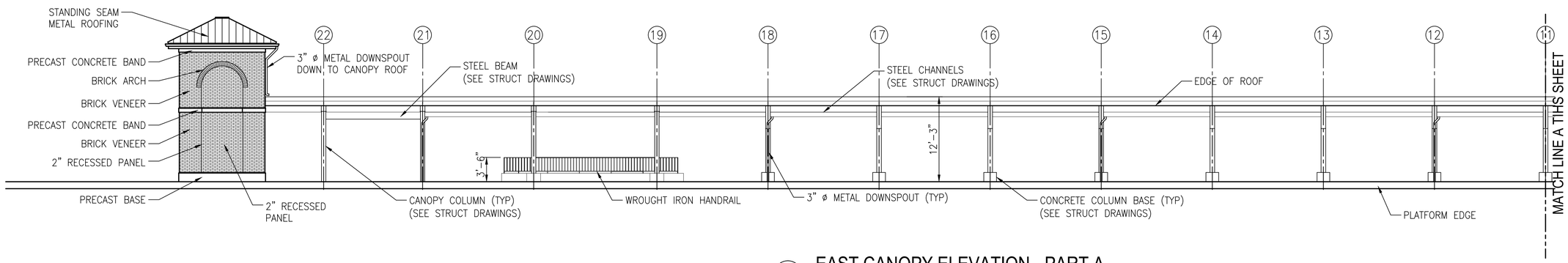

A / A-202 EAST CANOPY ELEVATION - PART A

SCALE: 1/8" = 1'-0"

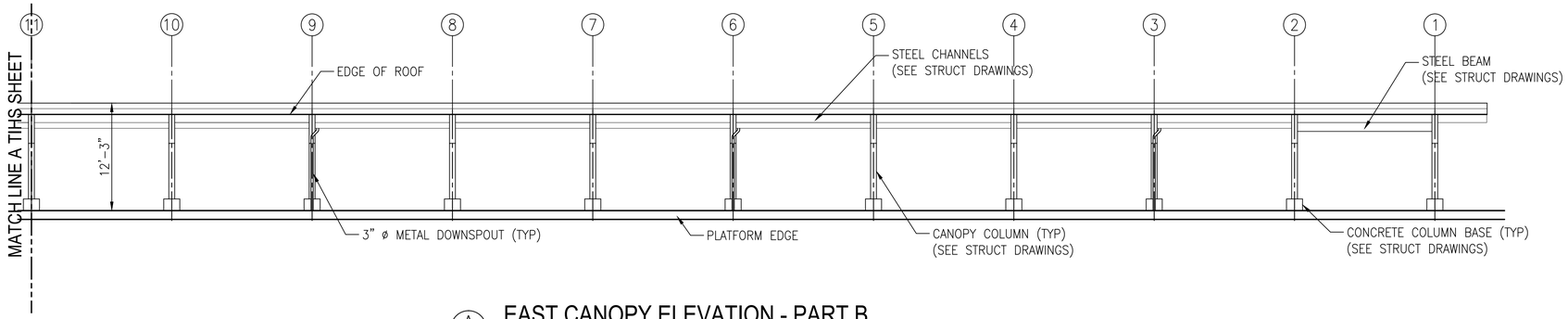

A / A-202 EAST CANOPY ELEVATION - PART B

SCALE: 1/8" = 1'-0"

60% SUBMITTAL

CONTRACT NO:	REVISIONS				
PROJECT NO:	BY	NO	DATE	DESCRIPTION	
DATE:					
DESIGNED:					
DRAFTED: LTN					
CHECKED:					
APPROVED:					

Gannett Fleming

VRE

VIRGINIA RAILWAY EXPRESS

ALEXANDRIA PEDESTRIAN TUNNEL

DISCIPLINE: ARCHITECTURAL EAST CANOPY ELEVATION

DRAWING NO: A-202

LIST NO:

SCALE: 1/8" = 1'-0"

DATE ISSUED: 5/25/16

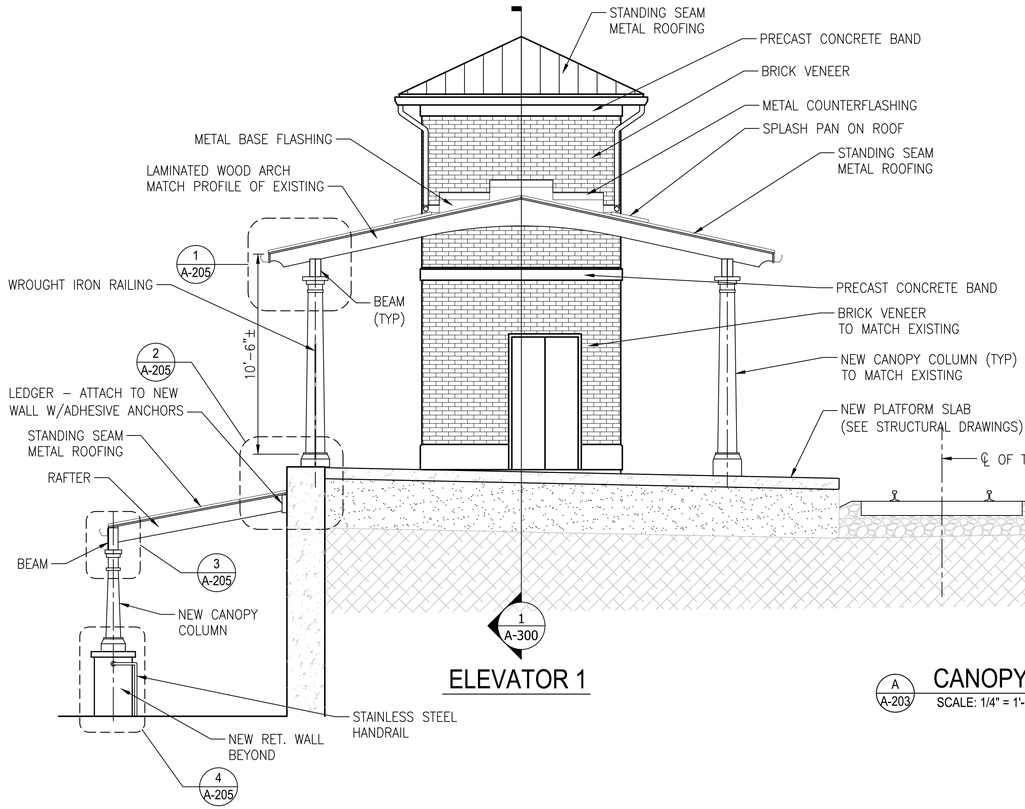

ELEVATOR 1

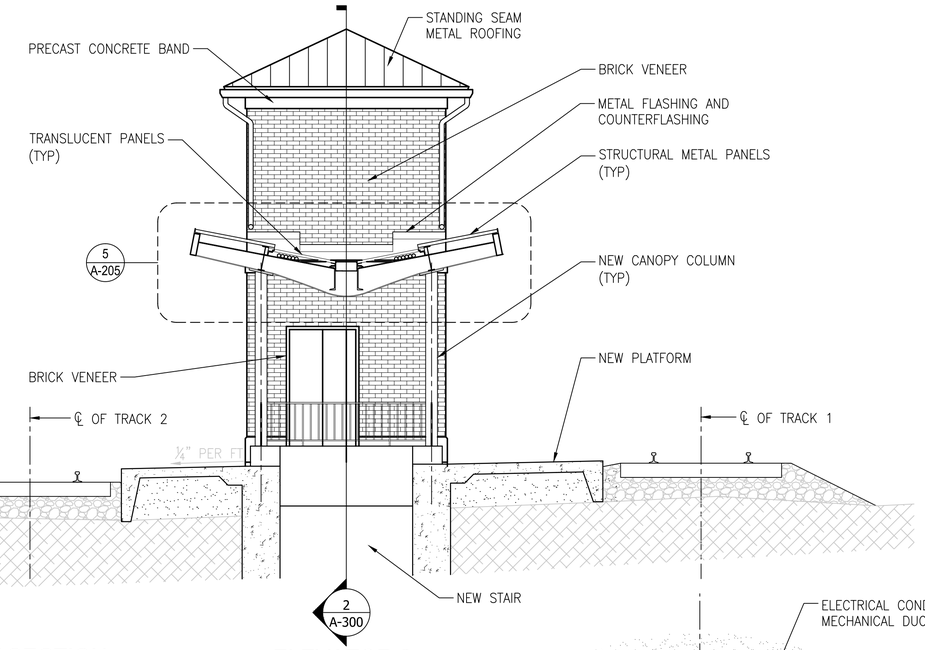

ELEVATOR 2

A A-203 **CANOPY ELEVATION / SECTION**
SCALE: 1/4" = 1'-0"

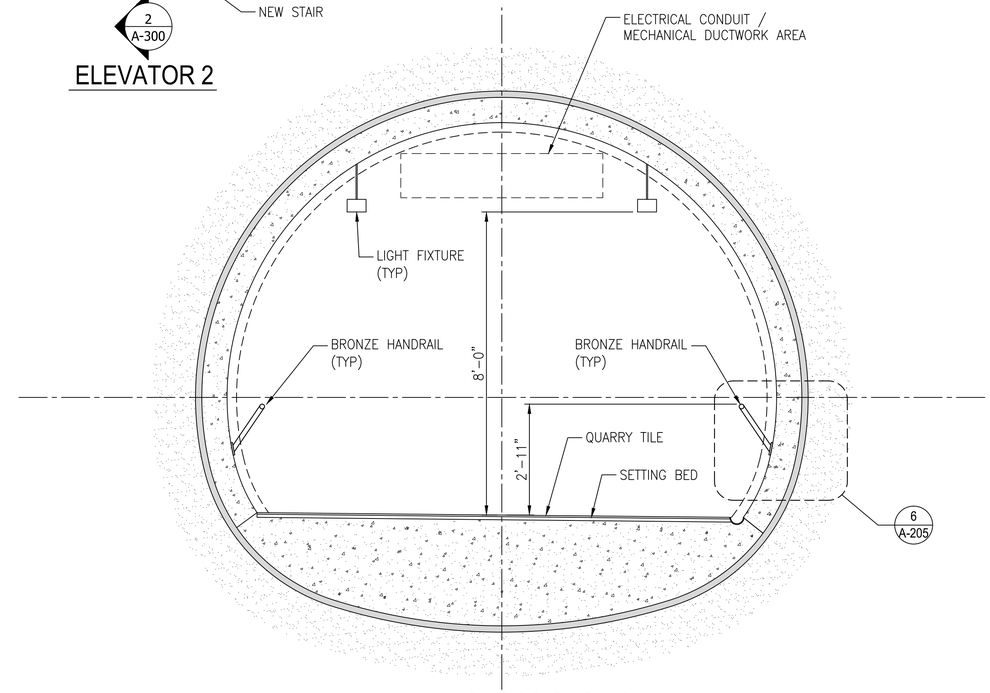

B A-201 **TUNNEL CROSS SECTION**
SCALE: 1/2" = 1'-0"

60% SUBMITTAL

CONTRACT NO:		REVISIONS			
PROJECT NO:		BY	NO	DATE	DESCRIPTION
	DATE:				
DESIGNED:	IA				
DRAFTED:	LTN				
CHECKED:					
APPROVED:					

Gannett Fleming

VRE

VIRGINIA RAILWAY EXPRESS

ALEXANDRIA
PEDESTRIAN TUNNEL

DISCIPLINE: ARCHITECTURAL ELEVATION / SECTIONS

DRAWING NO: A-203

LIST NO:

SCALE: 1/4" = 1'-0"

DATE ISSUED: 5/25/16

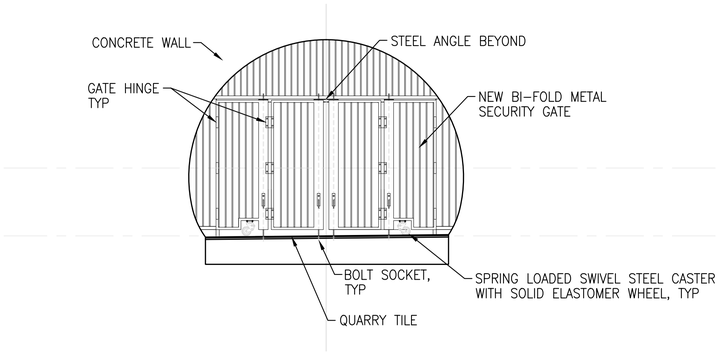

1 / A-204 SECURITY GATE ELEVATION
SCALE: 1/4" = 1'-0"

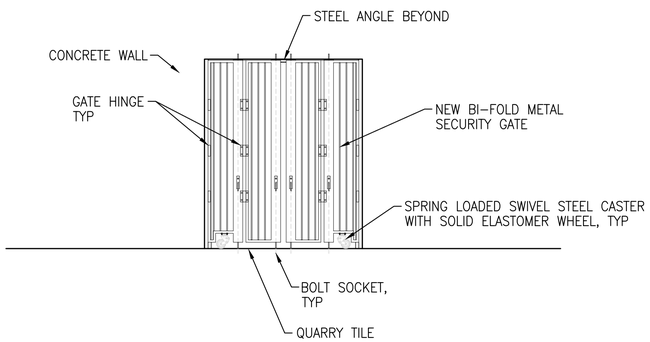

2 / A-204 SECURITY GATE ELEVATION
SCALE: 1/4" = 1'-0"

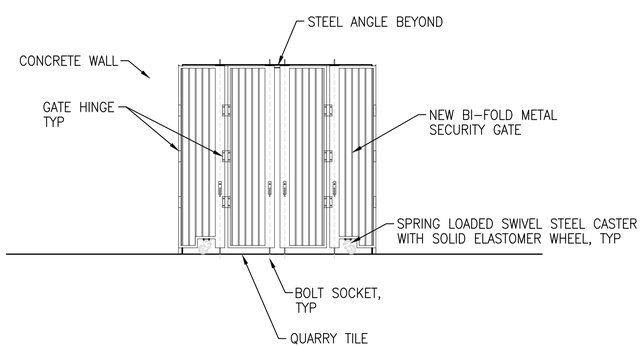

3 / A-204 SECURITY GATE ELEVATION
SCALE: 1/4" = 1'-0"

60% SUBMITTAL

CONTRACT NO:		REVISIONS			
PROJECT NO:		BY	NO	DATE	DESCRIPTION
	DATE:				
DESIGNED:					
DRAFTED: DRE					
CHECKED:					
APPROVED:					

Gannett Fleming

VRE

VIRGINIA RAILWAY EXPRESS

ALEXANDRIA
PEDESTRIAN TUNNEL

DISCIPLINE:
ARCHITECTURAL
SECURITY GATE PLAN, ELEVATIONS AND DETAILS

SCALE: 3/32" = 1'-0"

DATE ISSUED: 5/25/16

DRAWING NO: A-204

LIST NO:

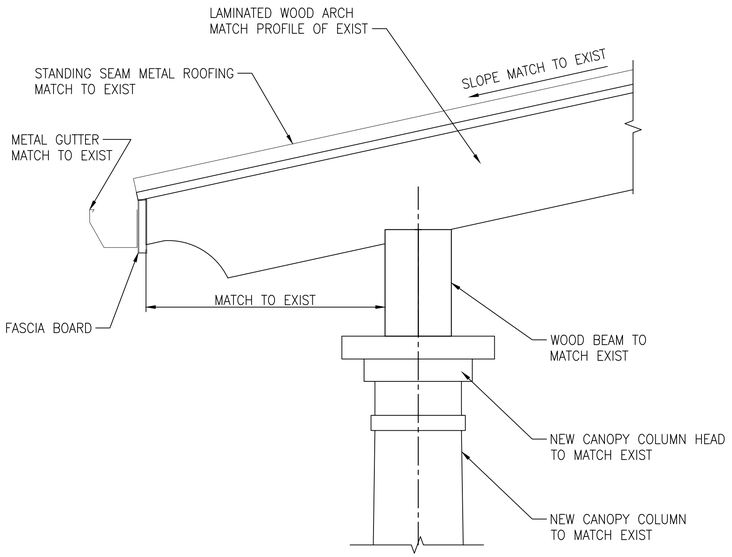

1 A-205 TYPICAL CANOPY DETAIL
SCALE: 1 1/2" = 1'-0"

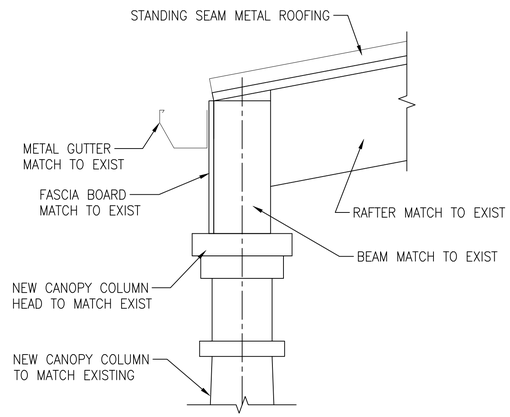

3 A-205 TYPICAL CANOPY DETAIL
SCALE: 1 1/2" = 1'-0"

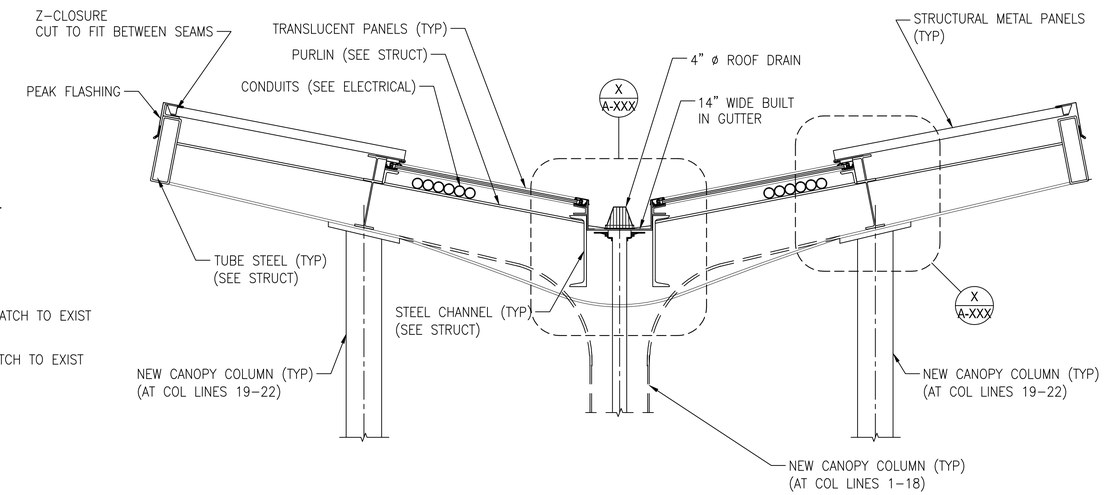

5 A-205 TYPICAL CANOPY SECTION
SCALE: 3/4" = 1'-0"

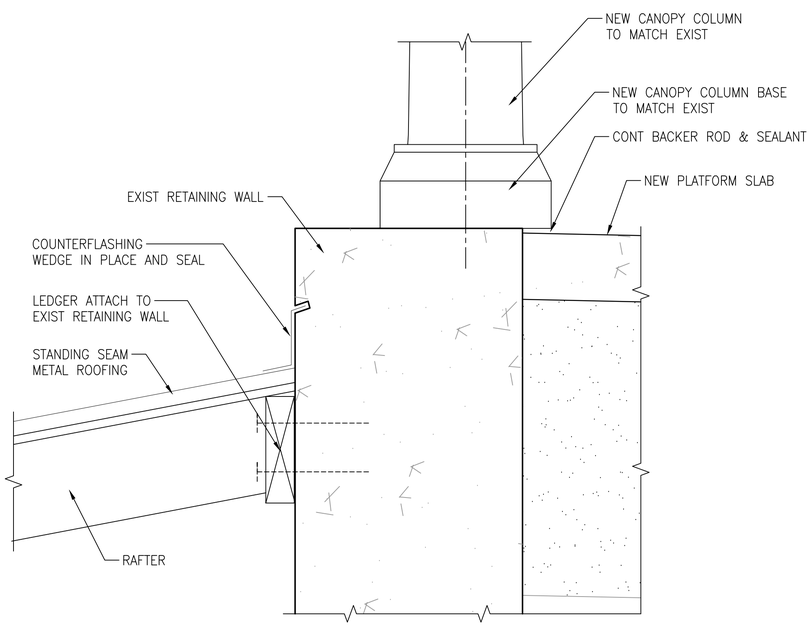

2 A-205 TYPICAL CANOPY DETAIL
SCALE: 1 1/2" = 1'-0"

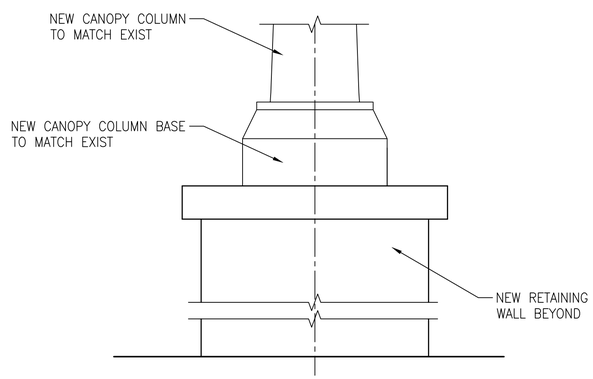

4 A-205 TYPICAL CANOPY DETAIL
SCALE: 1 1/2" = 1'-0"

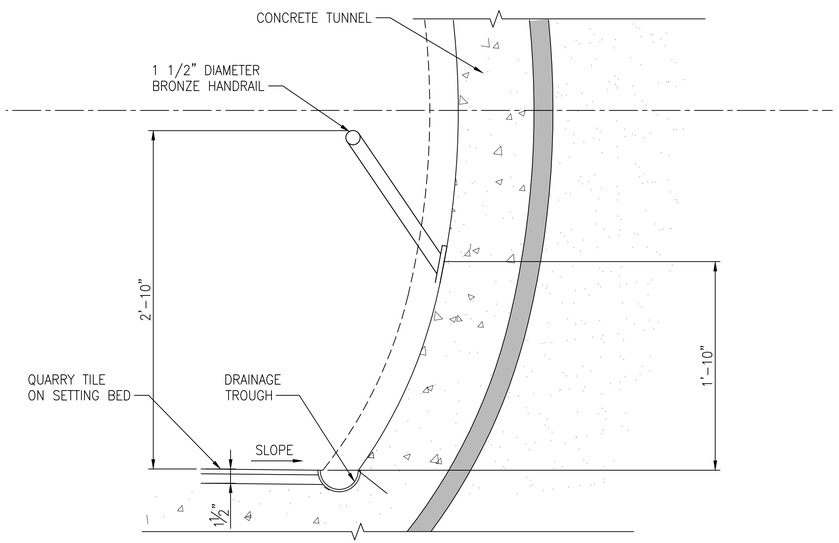

6 A-205 TYPICAL CANOPY DETAIL
SCALE: 1 1/2" = 1'-0"

60% SUBMITTAL

CONTRACT NO:	REVISIONS				
PROJECT NO:	BY	NO	DATE	DESCRIPTION	
DATE:					
DESIGNED: IA					
DRAFTED: LTN					
CHECKED:					
APPROVED:					

Gannett Fleming

VRE

VIRGINIA RAILWAY EXPRESS

ALEXANDRIA
PEDESTRIAN TUNNEL

DISCIPLINE:
ARCHITECTURAL
CANOPY AND TUNNEL DETAILS

SCALE: AS SHOWN

DATE ISSUED: 5/25/16

DRAWING NO: A-205

LIST NO:

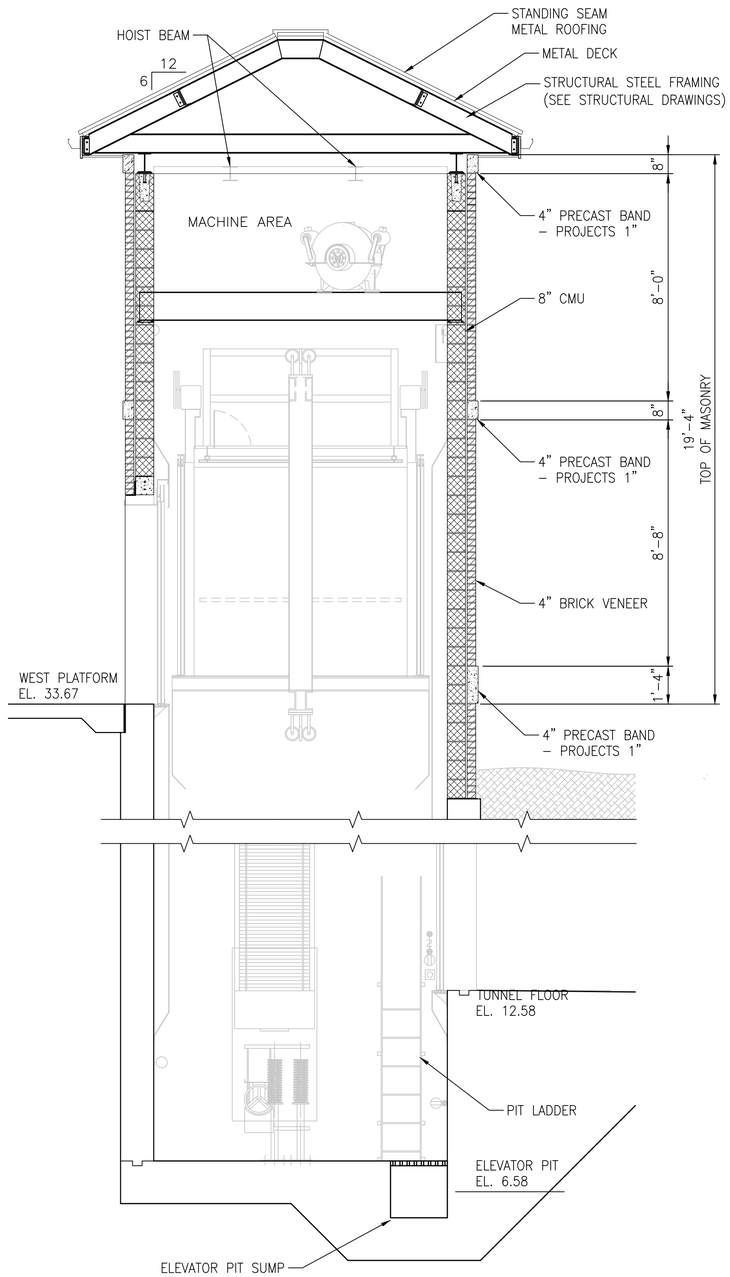

1 A-300 WEST PLATFORM ELEVATOR SECTION
SCALE: 3/8" = 1'-0"

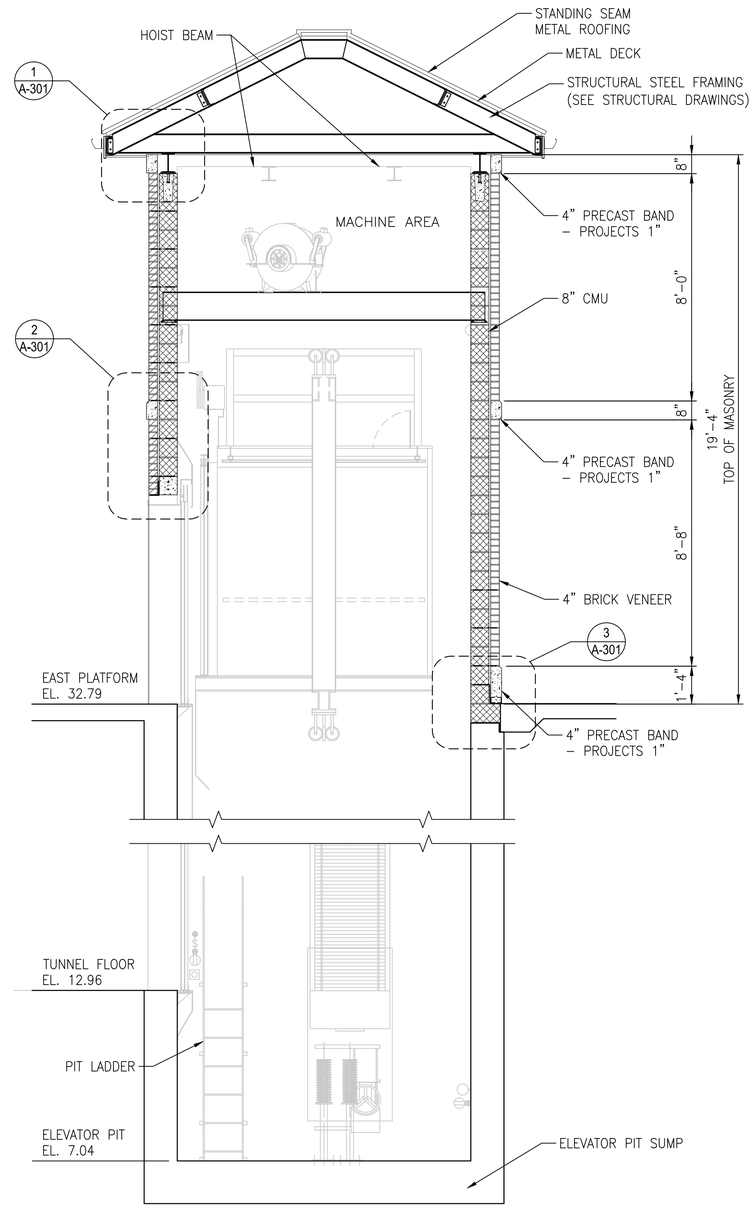

2 A-300 EAST PLATFORM ELEVATOR SECTION
SCALE: 3/8" = 1'-0"

60% SUBMITTAL

CONTRACT NO:		REVISIONS			
PROJECT NO:		BY	NO	DATE	DESCRIPTION
	DATE:				
DESIGNED: DRE	04/22/16				
DRAFTED: DRE	04/25/16				
CHECKED:					
APPROVED:					

Gannett Fleming

VRE

VIRGINIA RAILWAY EXPRESS

ALEXANDRIA PEDESTRIAN TUNNEL

DISCIPLINE: ARCHITECTURAL ELEVATOR 1 SECTION

DRAWING NO: A-300

LIST NO:

SCALE: 3/8" = 1'-0"

DATE ISSUED: 5/25/16

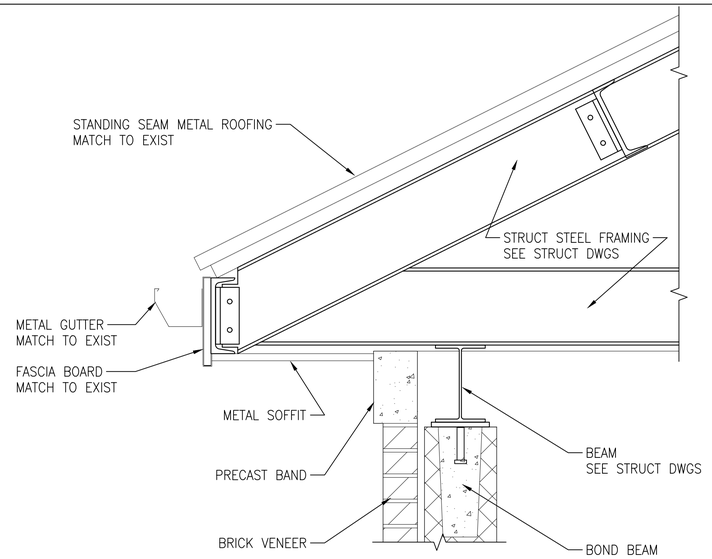

1 A-301 TYPICAL WALL DETAIL
SCALE: 1 1/2" = 1'-0"

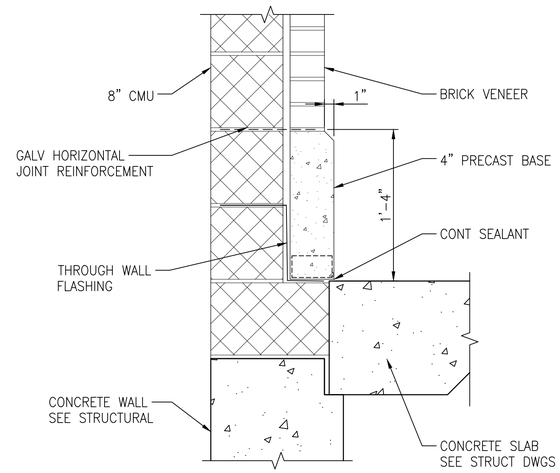

3 A-301 TYPICAL WALL DETAIL
SCALE: 1 1/2" = 1'-0"

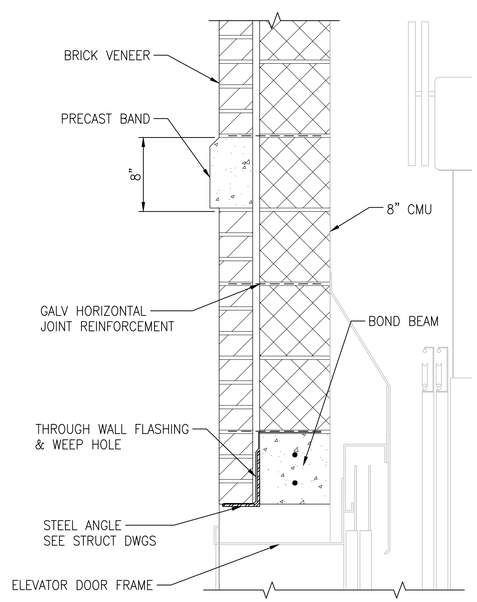

2 A-301 TYPICAL WALL DETAIL
SCALE: 1 1/2" = 1'-0"

60% SUBMITTAL

CONTRACT NO:		REVISIONS			
PROJECT NO:		BY	NO	DATE	DESCRIPTION
	DATE:				
DESIGNED: DRE	04/22/16				
DRAFTED: DRE	04/25/16				
CHECKED:					
APPROVED:					

Gannett Fleming

VRE

VIRGINIA RAILWAY EXPRESS

ALEXANDRIA
PEDESTRIAN TUNNEL

DISCIPLINE:
ARCHITECTURAL
WALL DETAILS

SCALE: 1 1/2" = 1'-0"

DATE ISSUED: 5/25/16

DRAWING NO: A-301

LIST NO:

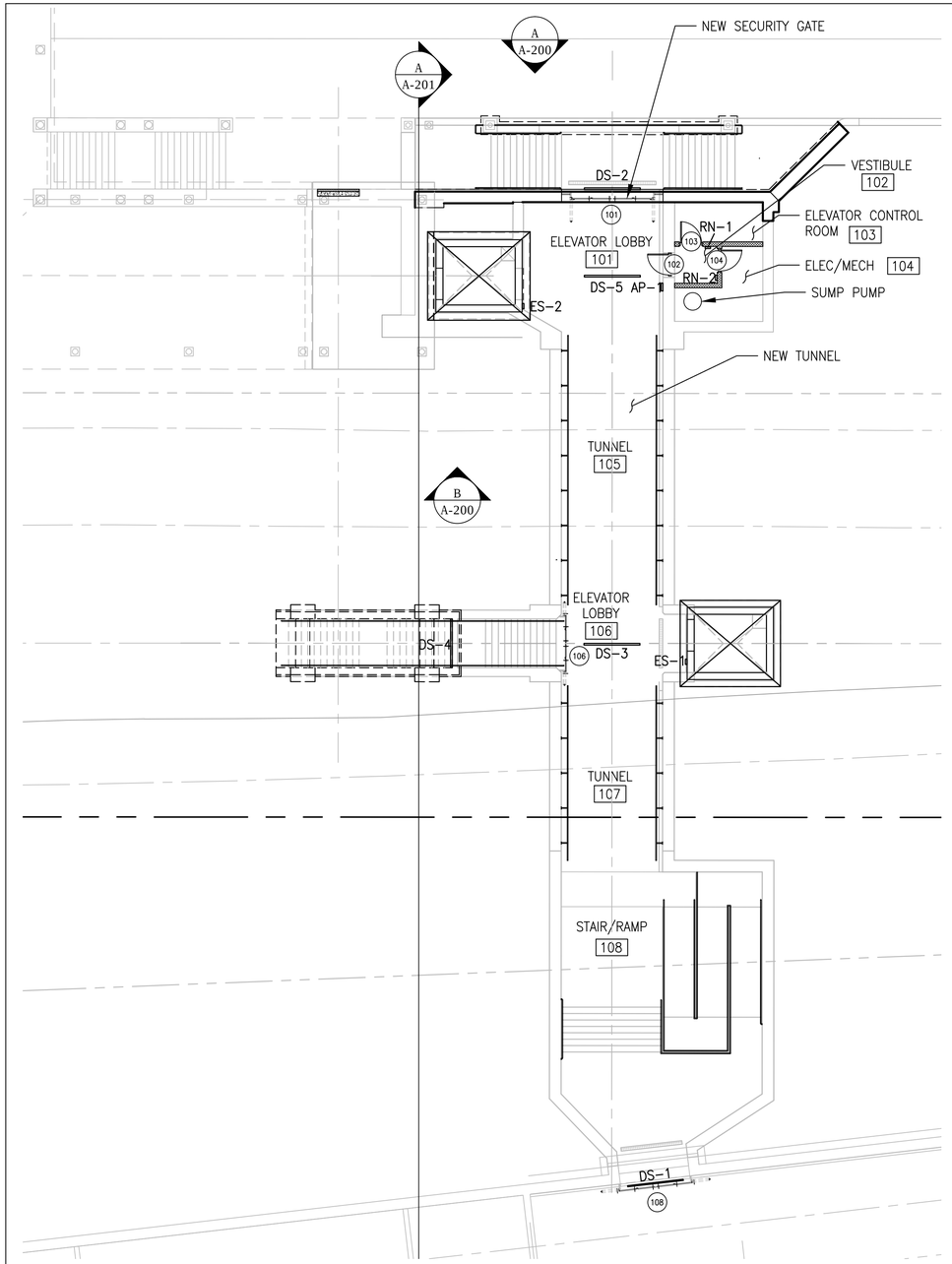

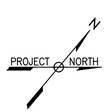

1 A-101 PARTIAL PLAN - SIGNAGE (TUNNEL LEVEL)
SCALE: 3/32" = 1'-0"

SIGN SCHEDULE

SEE DRAWINGS A-500 AND A-501 FOR SIGNAGE GRAPHIC DETAILS

	SIGN	DESCRIPTION	MATERIALS	MOUNTING	REMARKS
TUNNEL LEVEL	DS-1	TO VRE-ALEXANDRIA STATION	ALUMINUM	WALL MOUNTED	WMATA SIGN
	DS-2	TO VRE TRAINS / TO KING ST-OLD TOWN STATION	ALUMINUM	WALL MOUNTED	-
	DS-3	TO VRE TRAINS EAST PLATFORM	VINYL	PENDANT MOUNTED	DBL-SIDED
	DS-4	TO VRE WEST PLATFORM / PARKING / TO KING ST-OLD TOWN STATION	ALUMINUM	WALL MOUNTED	MOUNTED TO WALL @ ELEVATOR DOOR
	DS-5	TO VRE TRAINS WEST PLATFORM	VINYL	WALL MOUNTED	MOUNTED TO WALL @ ELEVATOR DOOR
	ES-1	ELEVATOR TO EAST PLATFORM / IN CASE OF FIRE	VINYL	PENDANT MOUNTED	-
	ES-2	ELEVATOR TO WEST PLATFORM / IN CASE OF FIRE	VINYL	PENDANT MOUNTED	-
	AP-1	AUTHORIZED PERSONNEL ONLY	ALUMINUM	WALL MOUNTED	-
	RN-1	ROOM 103	ALUMINUM	WALL MOUNTED	-
	RN-2	ROOM 104	ALUMINUM	WALL MOUNTED	-
PLATFORM LEVEL	AB-1	ASSISTED BOARDING AREA SIGN (WEST FACE)	VINYL	PENDANT MOUNTED	-
	AB-2	ASSISTED BOARDING AREA SIGN (EAST FACE)	VINYL	PENDANT MOUNTED	-
	AB-3	ASSISTED BOARDING AREA SIGN	ALUMINUM	POLE MOUNTED	-
	EX-1	EXIT SIGN	VINYL	PENDANT MOUNTED	-
	EX-2	EXIT SIGN	ALUMINUM	WALL MOUNTED	-
	FN-1	FAIR NOTICE SIGN	VINYL	PENDANT MOUNTED	-
	FN-3	THANK YOU FOR RIDING	VINYL	PENDANT MOUNTED	-
	NT-1	NO TRESSPASSING SIGN	ALUMINUM	WALL MOUNTED	-
	PN-1	PLATFORM NOTICE SIGN	VINYL	PENDANT MOUNTED	-
	PR-1	PROHIBITIONS SIGN	ALUMINUM	POLE MOUNTED	-
	SC-1	SECURITY NOTICE SIGN	ALUMINUM	WALL MOUNTED	-
	SM-1	SYSTEM MAP	-	-	-
	SN-1	STATION NAME SIGN	ALUMINUM	POLE MOUNTED	-
	SN-2	STATION NAME SIGN	VINYL	PENDANT MOUNTED	-

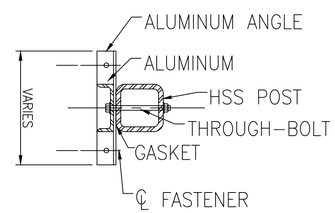

3 A-400 SECTION THROUGH POST
SCALE: 1 1/2" = 1'-0"

60% SUBMITTAL

CONTRACT NO:		REVISIONS			
PROJECT NO:		BY	NO	DATE	DESCRIPTION
	DATE:				
DESIGNED:					
DRAFTED:	DRE				
CHECKED:					
APPROVED:					

Gannett Fleming

VRE

VIRGINIA RAILWAY EXPRESS

ALEXANDRIA
PEDESTRIAN TUNNEL

DISCIPLINE:
ARCHITECTURAL
SIGNAGE PLAN & SCHEDULE

SCALE: 3/32" = 1'-0"

DATE ISSUED: 5/25/16

DRAWING NO: A-400

LIST NO:

KEY PLAN

SCALE: 1/128" = 1'-0"

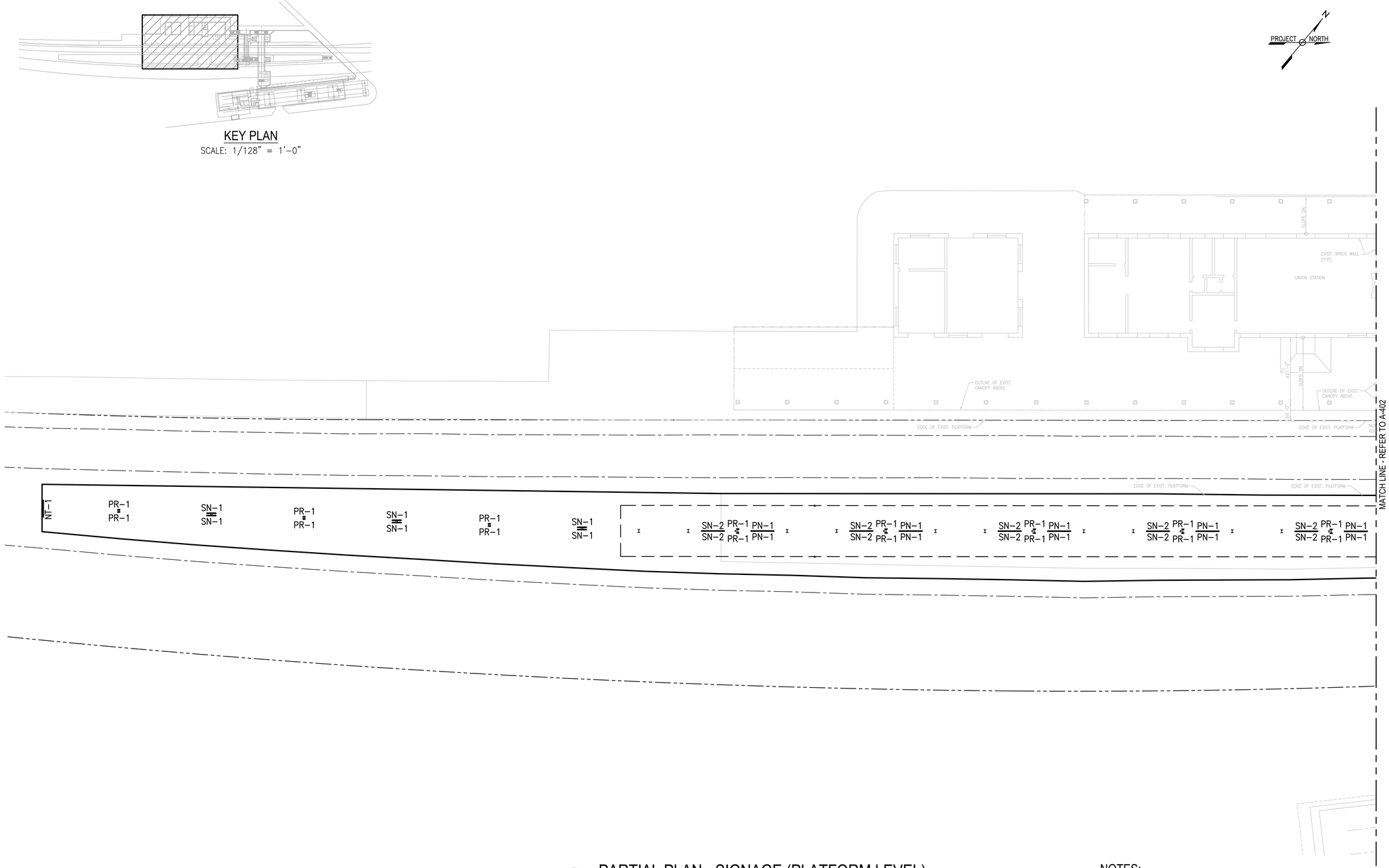

PARTIAL PLAN - SIGNAGE (PLATFORM LEVEL)

1 / A-401

SCALE: 1/16" = 1'-0"

NOTES:

1. FOR GENERAL NOTES, REFER TO DRAWINGS A-001.

60% SUBMITTAL

CONTRACT NO:		REVISIONS			
PROJECT NO:		BY	NO	DATE	DESCRIPTION
	DATE:				
DESIGNED: IA					
DRAFTED: LTN					
CHECKED: MA/DB					
APPROVED:					

Gannett Fleming

VRE

VIRGINIA RAILWAY EXPRESS

ALEXANDRIA PEDESTRIAN TUNNEL

DISCIPLINE: ARCHITECTURAL PLATFORM SIGNAGE/CANOPY PLAN

DRAWING NO: A-401

LIST NO:

SCALE: 1/16" = 1'-0"

DATE ISSUED: 5/25/16

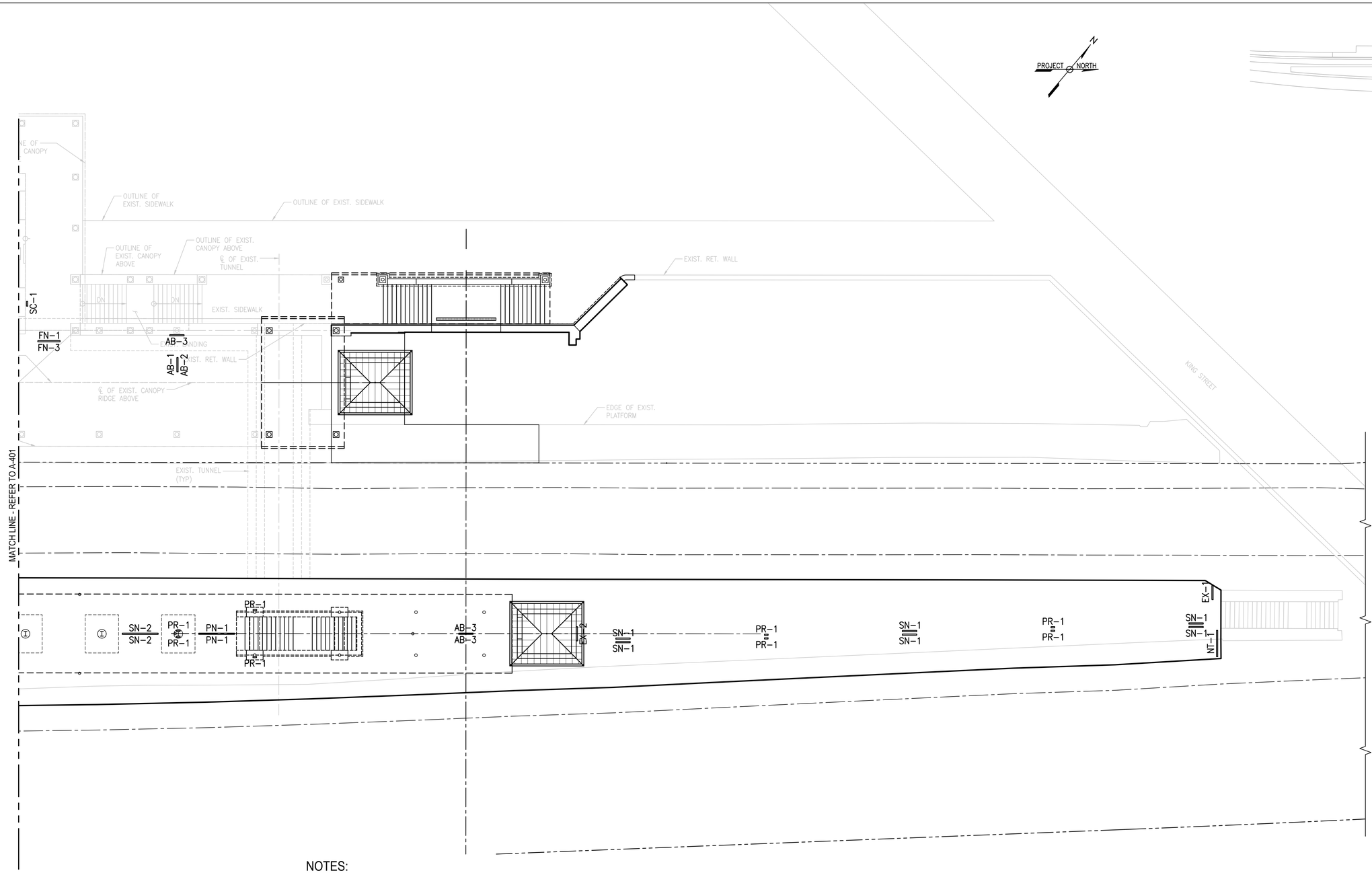

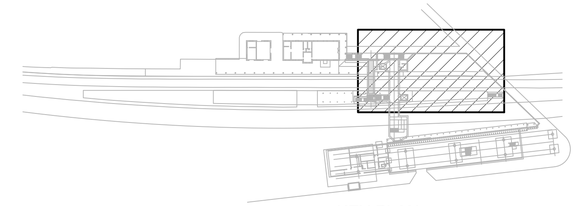

KEY PLAN
SCALE: 1/128" = 1'-0"

NOTES:

1. FOR GENERAL NOTES, REFER TO DRAWINGS A-001.

1 / A-103 PARTIAL PLAN - SIGNAGE (PLATFORM LEVEL)
SCALE: 3/32" = 1'-0"

60% SUBMITTAL

CONTRACT NO:	REVISIONS				
PROJECT NO:	BY	NO	DATE	DESCRIPTION	
DATE:					
DESIGNED: IA					
DRAFTED: LTN					
CHECKED: MA/DB					
APPROVED:					

Gannett Fleming

VRE

VIRGINIA RAILWAY EXPRESS

ALEXANDRIA
PEDESTRIAN TUNNEL

DISCIPLINE: ARCHITECTURAL
PLATFORM SIGNAGE/CANOPY PLAN

SCALE: 3/32" = 1'-0"

DATE ISSUED: 5/25/16

DRAWING NO: A-402

LIST NO:

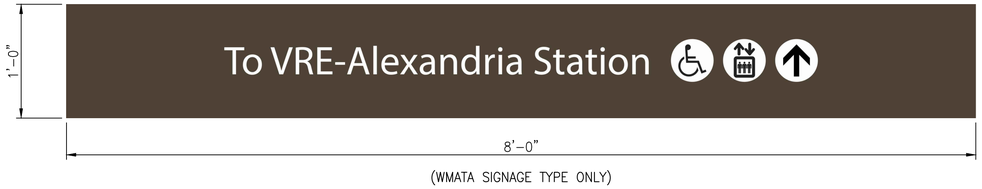

(WMATA SIGNAGE TYPE ONLY)

DS-1

NOTE: REFER TO WMATA METRORAIL SYSTEM SIGNAGE DESIGN MANUAL, RELEASE DATE 01/2016.

FN-3

AB-1 (WEST FACE)

AB-1 (EAST FACE)

NO TRESSPASSING SIGN (NT-1)

EX-1

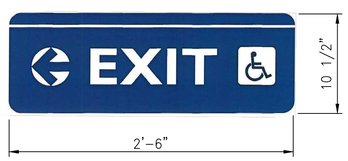

EX-2

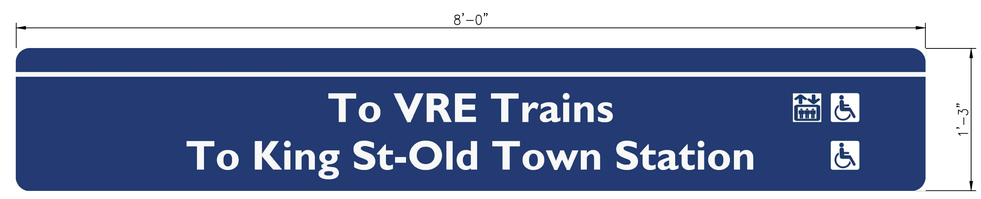

DIRECTIONAL SIGN (DS-2)

ASSISTED BOARDING AREA SIGN (AB-3)

FN-1

NOTES:

1. REFER TO AMTRAK GRAPHIC SIGNAGE STANDARDS MANUAL FOR VRE SIGNAGE CRITERIA.
2. ALL PENDANT SIGNS SHOULD BE MOUNTED TIGHT TO UTILITIES.

1 A-500 SIGNAGE GRAPHICS
SCALE: 1 1/2" = 1'-0"

60% SUBMITTAL

CONTRACT NO:	REVISIONS				
PROJECT NO:	BY	NO	DATE	DESCRIPTION	
DATE:					
DESIGNED:					
DRAFTED: CLR					
CHECKED:					
APPROVED:					

Gannett Fleming

VRE

VIRGINIA RAILWAY EXPRESS

ALEXANDRIA PEDESTRIAN TUNNEL

DISCIPLINE: ARCHITECTURAL SIGNAGE GRAPHICS & DETAILS

DRAWING NO: A-500

LIST NO:

SCALE: 1 1/2" =1'-0"

DATE ISSUED: 5/25/16

PLATFORM NOTICE SIGN (PN-1)

PROHIBITIONS SIGN (PR-1)

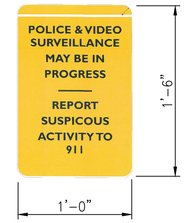

SECURITY NOTICE SIGN (SC-1)

SM-1

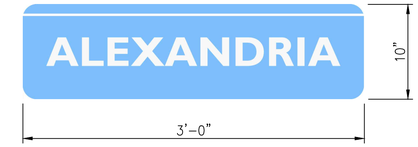

SN-1

NOTE: MIRROR GRAPHIC INFORMATION ON OTHER SIDE OF SIGN

DIRECTIONAL SIGN (DS-3)

DIRECTIONAL SIGN (DS-4)

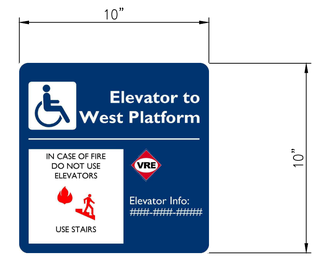

ELEVATOR SAFETY SIGN (ES-1)

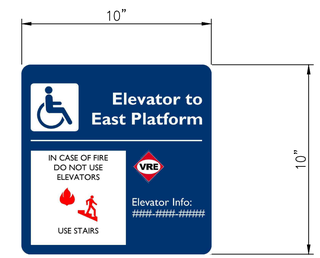

ELEVATOR SAFETY SIGN (ES-2)

NOTE: MIRROR GRAPHIC INFORMATION ON OTHER SIDE OF SIGN

DIRECTIONAL SIGN (DS-5)

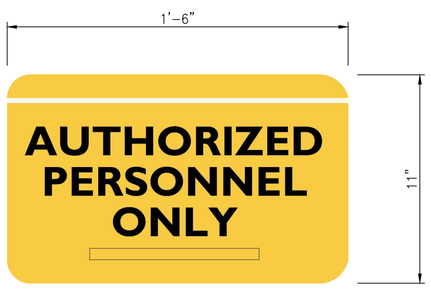

AUTHORIZED PERSONNEL SIGN (AP-1)

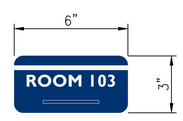

ROOM NUMBER SIGN (RN-1)

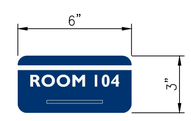

ROOM NUMBER SIGN (RN-2)

NOTES:

1. REFER TO AMTRAK GRAPHIC SIGNAGE STANDARDS MANUAL FOR VRE SIGNAGE CRITERIA.
2. ALL PENDANT SIGNS SHOULD BE MOUNTED TIGHT TO UTILITIES.

1 / A-501 SIGNAGE GRAPHICS
SCALE: 1 1/2" = 1'-0"

60% SUBMITTAL

CONTRACT NO:		REVISIONS			
PROJECT NO:		BY	NO	DATE	DESCRIPTION
	DATE:				
DESIGNED:					
DRAFTED: CLR					
CHECKED:					
APPROVED:					

Gannett Fleming

VRE

VIRGINIA RAILWAY EXPRESS

ALEXANDRIA
PEDESTRIAN TUNNEL

DISCIPLINE: ARCHITECTURAL
SIGNAGE GRAPHICS & DETAILS

DRAWING NO: A-501

LIST NO:

SCALE: 1 1/2" =1'–0"

DATE ISSUED: 5/25/16

SYMBOL LEGEND

SYMBOL	DESCRIPTION	MOUNTING HEIGHT
	208/120V PANELBOARD, SURFACE MOUNTED	78" TO TOP
	CONTROL PANEL/CABINET, SURFACE MOUNTED	78" TO TOP
	POWER TRANSFORMER, WITH GROUND	= =
	SYSTEM GROUND OR EQUIPMENT GROUND	= =
AF AT 3P L2	CIRCUIT BREAKER ATTRIBUTES: AF = FRAME SIZE AT = TRIP SIZE 3P = QTY. OF POLES L2 = MISC. INFO. LSGI = LONG, SHORT TIME, INSTANTANEOUS, GROUND FAULT TRIP FUNCTIONS	= =
AF P OR AF/NF/P/3R	NON-FUSED DISCONNECT SWITCH, SIZE AS INDICATED WHERE: "AF" – INDICATES AMPERE SWITCH SIZE "NF" – DENOTES NON-FUSED "P" – DENOTES POLE "3R" – DENOTES NEMA TYPE ENCLOSURE	60" TO TOP = =
AF OR AT 3P L2 AF/AT/P/3R	FUSED DISCONNECT SWITCH, SIZE AS INDICATED WHERE: "AF" – INDICATES AMPERE SWITCH SIZE "AT" – INDICATES AMPERE FUSE SIZE "P" – DENOTES POLE "3R" – DENOTES NEMA TYPE ENCLOSURE	60" TO TOP = =
OR	COMBINATION MOTOR STARTER AND DISCONNECT SWITCH	60" TO TOP = =
	MOTOR STARTER	60" TO TOP
M	MANUAL MOTOR STARTER WITH MOTOR OVERLOAD PROTECTION.	48" AFF
M	MOTOR TERMINATION	= =
SPD	SURGE PROTECTION DEVICE	= =
X b	SWITCH, TOGGLE "b" DENOTES SWITCH CONTROL "X=2" DENOTES TWO POLE SWITCH "X=3" DENOTES THREE POLE SWITCH "X=4" DENOTES FOUR POLE SWITCH "WP" DENOTES WEATHER PROOF	48" AFF = =
2	125 VOLT, 2 POLE, 3 WIRE, 20 AMP RECEPTACLE. "2" DENOTES CIRCUIT NUMBER.	18" AFF
GFI WP	125 VOLT, 2 POLE, 3 WIRE, 20 AMP DUPLEX RECEPTACLE GFI DENOTES EQUIPPED WITH INTEGRAL GROUND FAULT INTERRUPTER WP DENOTES WEATHER PROOF RECEPTACLE WITH WEATHER PROOF WHILE-IN-USE COVER	18" AFF
	WALL MOUNTED LIGHT FIXTURE	AS INDICATED
	1' X 4' LIGHT FIXTURE	= =
J OR J	JUNCTION BOX	AS INDICATED
E	SMOKE DETECTOR – ELEVATOR	= =
	HEAT DETECTOR	= =

NOTE: SOME SYMBOLS MAY NOT BE USED ON THIS PROJECT.

SYMBOL LEGEND CONTD.

SYMBOL	DESCRIPTION	MOUNTING HEIGHT
PTZ	CCTV CAMERA	= =
	PUBLIC INFORMATION DISPLAY (PID) MONITOR	= =
S	SPEAKER	= =
PC	PHOTOCELL	= =

ELECTRICAL CONVENTIONS

LIGHTING

LUMINAIRE TYPE – SEE LUMINAIRE SCHEDULE

A 1 — CIRCUIT NUMBER

a — CONTROL POINT DESIGNATION

SYMBOL	DESCRIPTION
LP2A–1	HOMERUN TO PANEL "LP2A", CIRCUIT #1 (VIA 20A–1P CIRCUIT BREAKER). PROVIDE INSULATED GROUND CONDUCTOR IN ACCORDANCE WITH SPECIFICATIONS. THE USE OF DASHED LINE IN THIS SYMBOL INDICATES A BELOW GRADE HOMERUN.
	EXPOSED OR CONCEALED CONDUIT AND/OR WIRING.
	BELOW GRADE CONDUIT AND/OR WIRING.

ABBREVIATIONS

A	AMPERES
ADA	AMERICANS WITH DISABILITIES ACT
AFF	ABOVE FINISH FLOOR
AFG	ABOVE FINISH GRADE
AHJ	AUTHORITY HAVING JURISDICTION
AHU	AIR HANDLING UNIT
AIC	AMPERE INTERRUPTING CAPACITY
AL	ALUMINUM
ANSI	AMERICAN NATIONAL STANDARDS INSTITUTE
ARCH	ARCHITECT
ATS	AUTOMATIC TRANSFER SWITCH
ATC	AUTOMATIC TEMPERATURE CONTROL
AWG	AMERICAN WIRE GAUGE
BFG	BELOW FINISH GRADE
BLDG	BUILDING
C	CONDUIT
CAT	CATALOG
CB	CIRCUIT BREAKER
CBM	CERTIFIED BALLAST MANUFACTURERS
CKT	CIRCUIT
CL	CENTERLINE
CLF	CURRENT LIMITING FUSE
CMS	COMBINATION MOTOR STARTER & DISCONNECT
COL	COLUMN
CPT	CONTROL POWER TRANSFORMER
CT	CURRENT TRANSFORMER
CU	COPPER
DPM	DIGITAL POWER METER
DWG	DRAWING
DS	DISCONNECT SWITCH
EC	ELECTRICAL CONTRACTOR
ECB	ENCLOSED CIRCUIT BREAKER
EF	EXHAUST FAN
EM	EMERGENCY
EMT	ELECTRICAL METALLIC TUBING
EPO	EMERGENCY POWER OFF
EWC	ELECTRIC WATER COOLER
EX	EXISTING
ETR	EXISTING TO REMAIN
F	FUSE
FA	FIRE ALARM
FACP	FIRE ALARM CONTROL PANEL
FLA	FULL LOAD AMPERES
FMC	FLEXIBLE METAL CONDUIT
FT	FEET, FLOW TRANSMITTER
FVNR	FULL VOLTAGE NON REVERSING (STARTER)
GND,G	GROUND OR GROUNDING
GRH	GAS FIRED RADIANT HEATER
GRMC	GALVANIZED RIGID METALLIC CONDUIT
HOA	HAND, OFF, AUTOMATIC SWITCH
HP	HORSEPOWER
HRV	HEAT RECOVERY AND VENTILATION UNIT
IEEE	INSTITUTE OF ELECTRICAL AND ELECTRONIC ENGINEERS
I&C	INSTRUMENTATION AND CONTROL
IMC	INTERMEDIATE METAL CONDUIT
INT	INTERLOCK
KCMIL	THOUSAND CIRCULAR MILS
KVA	KILOVOLT AMPERES
KW	KILOWATTS
LED	LIGHT EMITTING DIODE
LE	LEVEL ELEMENT
LIT	LEVEL INDICATOR TRANSMITTER
LTG	LIGHTING
LFMC	LIQUID TIGHT FLEXIBLE METAL CONDUIT
MC	METAL CLAD CABLE
MCB	MAIN CIRCUIT BREAKER
MCC	MOTOR CONTROL CENTER
MCP	MOTOR CIRCUIT PROTECTOR
MISC	MISCELLANEOUS
MLO	MAIN LUGS ONLY
MMS	MANUAL MOTOR STARTER SWITCH
MS	MOTOR STARTER
NC	NORMALLY CLOSED
NEC	NATIONAL ELECTRIC CODE
NEMA	NATIONAL ELECTRICAL MANUFACTURES ASSOCIATION
NFPA	NATIONAL FIRE PROTECTION ASSOCIATION
NO	NORMALLY OPEN OR NUMBER
NTS	NOT TO SCALE
P	POLE
PA	PUBLIC ADDRESS
PB	PUSHBUTTON
PNL	PANEL
POS	PROVIDED UNDER OTHER SECTIONS
PPL	PPL ELECTRIC UTILITIES
P.S.T.	PRIMARY SETTLING TANK
PVC	POLYVINYL CHLORIDE
PWR	POWER
QTY	QUANTITY
REL	RELOCATE
REQ'D	REQUIRED
REX	REMOVE EXISTING
RMC	RIGID METAL CONDUIT
RMS	ROOT MEAN SQUARED
RNMC	RIGID NON-METALLIC CONDUIT
RTU	ROOF TOP UNIT
SCADA	SYSTEM CONTROL AND DATA ACQUISITION
SP	SPARE
SPD	SURGE PROTECTIVE DEVICE
SS	STAINLESS STEEL
SW	SWITCH
SYM	SYMMETRICAL
TEL	TELEPHONE
TPS	TWISTED PAIR, SHIELDED
TMCB	THERMAL MAGNETIC CIRCUIT BREAKER
TVSS	TRANSIENT VOLTAGE SURGE SUPPRESSION UNIT
TYP	TYPICAL
UG	UNDERGROUND OR UNDERGRADE
UL	UNDERWRITERS LABORATORIES
UON	UNLESS OTHERWISE NOTED
V	VOLT
VRE	VIRGINIA RAILWAY EXPRESS
VT	VOLTAGE TRANSFORMER
W	WIRE
WH	WATER HEATER
WP	WEATHER PROOF
XFMR	TRANSFORMER
△	DELTA
Y	WYE
ø	PHASE

GENERAL NOTES (APPLICABLE TO ALL ELECTRICAL WORK)

1. PROVIDE ALL LABOR, MATERIALS, TOOLS, EQUIPMENT, COORDINATION, ADDITIONAL DESIGN AND ALL INCIDENTALS NECESSARY TO PROVIDE A COMPLETE AND OPERABLE SYSTEM AS DETAILED ON PLANS TO THE SATISFACTION OF THE ENGINEER AND THE OWNER. COORDINATE ALL WORK WITH THE ENGINEER BEFORE THE START OF WORK. ALL WORK SHALL BE PERFORMED BY A QUALIFIED ELECTRICAL CONTRACTOR LICENSED IN THE STATE OF VIRGINIA THAT HAS PREVIOUSLY PERFORMED WORK OF THIS SIZE AND TYPE.
2. PRIOR TO SUBMITTING BID, THE CONTRACTOR SHALL VISIT THE SITE AND BE THOROUGHLY FAMILIAR WITH THE EXISTING CONDITIONS AND PROPOSED CONSTRUCTION. CONTRACTOR SHALL INCLUDE IN THEIR BID ALL MATERIAL, LABOR AND ALL INCIDENTALS FOR A COMPLETE INSTALLATION WHETHER SPECIFICALLY CALLED FOR OR NOT. ALL ERRORS, DISCREPANCIES AND MISSED ITEMS SHALL BE BROUGHT TO THE ATTENTION OF THE ENGINEER DURING THE BIDDING PROCESS BY THE CONTRACTOR. THESE ITEMS SHALL BE INCLUDED IN THE BID PRICE. NO EXTRA COST WILL BE ALLOWED FOR ANY DISCREPANCY WHICH COULD HAVE BEEN NOTICED AT THE SITE VISIT BY THE CONTRACTOR.
3. PERFORM WORK AS REQUIRED BY APPLICABLE CODES, REGULATIONS AND LAWS OF LOCAL, STATE AND FEDERAL GOVERNMENTS AND OTHER AUTHORITIES WITH LAWFUL JURISDICTION. ALL WORK SHALL BE IN ACCORDANCE WITH THE LATEST EDITION OF THE NATIONAL ELECTRICAL CODE. ALL WORK SHALL BE IN ACCORDANCE WITH REQUIREMENTS OF LOCAL AUTHORITY HAVING JURISDICTION.
4. MATERIAL AND EQUIPMENT SHALL BE UL, NEMA, ANSI, IEEE, ADA & CBM APPROVED FOR INTENDED SERVICE. MATERIAL AND INSTALLATION SHALL MEET REQUIREMENTS OF NATIONAL AND STATE ELECTRICAL CODE.
5. GIVE NOTICES, FILE PLANS, OBTAIN PERMITS AND LICENSES, PAY FEES AND BACK CHARGES, AND OBTAIN NECESSARY APPROVALS FROM AUTHORITIES THAT HAVE JURISDICTION. IT IS THE CONTRACTOR'S RESPONSIBILITY TO DETERMINE THE REQUIRED NOTICES, PERMITS, LICENSES, FEES, BACK CHARGES AND APPROVALS REQUIRED FOR THIS PROJECT.
6. MAINTAIN RECORD DRAWINGS ON SITE. RECORD SET MUST BE COMPLETE AND CURRENT AND AVAILABLE FOR INSPECTION WHEN REQUISITIONS FOR PAYMENT ARE SUBMITTED.
7. GUARANTEE WORK IN WRITING FOR TWO YEARS FROM DATE OF FINAL ACCEPTANCE. REPAIR OR REPLACE DEFECTIVE MATERIALS OR INSTALLATION AT NO COST TO OWNER DURING THE GUARANTEE PERIOD. CORRECT DAMAGE CAUSED IN MAKING NECESSARY REPAIRS AND REPLACEMENTS UNDER GUARANTEE AT NO COST TO OWNER. SUBMIT GUARANTEE TO OWNER BEFORE FINAL PAYMENT.
8. COORDINATE ALL ELECTRICAL ITEMS WITH EXISTING FIELD CONDITIONS. LOCATIONS SHOWN ARE APPROXIMATE AND MAY REQUIRE MINOR ADJUSTMENT IN THE FIELD TO SATISFY THE DESIGN INTENT.
9. THE LOCATIONS SHOWN ON THESE PLANS ARE APPROXIMATE AND REQUIRE COORDINATION WITH ALL OTHER TRADES AND VERIFICATION OF EXISTING CONDITIONS. ROUTING OF CONDUIT IS DIAGRAMMATIC IN NATURE AND NOT INTENDED TO SHOW ALL REQUIRED OFFSETS AND DETAILS. THE CONTRACTOR IS RESPONSIBLE FOR FIELD VERIFICATION OF ALL EXISTING ASSOCIATED EQUIPMENT AND CONDITIONS. COORDINATE THE LOCATION OF ALL EQUIPMENT WITH THE ENGINEER AND THE OWNER. CONTRACTOR IS RESPONSIBLE FOR OBTAINING ALL OTHER TRADES' DRAWINGS AND SPECIFICATIONS AND COORDINATING WITH ALL OTHER TRADES DURING BIDDING AND CONSTRUCTION.
10. CONTRACTOR SHALL BE RESPONSIBLE FOR MAINTAINING CONTINUITY OF ALL POWER, CONTROL, AND COMMUNICATION FUNCTIONS TO ALL AREAS AFFECTED BY DEMOLITION AND/OR NEW CONSTRUCTION.
11. CONTRACTOR SHALL NOT CUT ANY ACTIVE ELECTRICAL OR COMMUNICATIONS LINES DURING CONSTRUCTION. IF THE CONTRACTOR ACCIDENTALLY CUTS A LINE, THEN THEY SHALL CONTACT THE ENGINEER IMMEDIATELY BEFORE PROCEEDING WITH FURTHER WORK.
12. CONTRACTOR SHALL SUBMIT FOR APPROVAL, SHOP DRAWINGS FOR ALL EQUIPMENT AND MATERIALS USED ON THE PROJECT. SUBMITTALS SHALL BE APPROVED BY THE ENGINEER BEFORE PURCHASE OF MATERIALS.
13. ALL ELECTRICAL CURRENT CARRYING PARTS SHALL BE COPPER FOR ALL EQUIPMENT.
14. PERMANENTLY LABEL ALL NEW ELECTRICAL EQUIPMENT, INCLUDING BUT NOT LIMITED TO, DEVICE DESIGNATION AND SUPPLY CIRCUIT DESIGNATION. UPDATE PANEL DIRECTORIES TO INCLUDE NEW CIRCUIT INFORMATION RESULTING FROM THIS PROJECT.
15. PROVIDE TEMPORARY POWER AND LIGHTING FOR ALL TRADES AS REQUIRED TO COMPLETE THE PROJECT. ALL TEMPORARY AND INTERIM EQUIPMENT SHALL BE INSTALLED IN ACCORDANCE WITH ALL APPLICABLE CODES AND STANDARDS INCLUDING, BUT NOT LIMITED TO, NFPA 110 AND NFPA 70. THE CONTRACTOR IS RESPONSIBLE FOR COORDINATING THIS REQUIREMENT WITH ALL OTHER TRADES AND INCLUDING ALL ASSOCIATED COST IN BID PRICE.
16. REFER TO SPECIFICATIONS FOR ADDITIONAL INFORMATION THAT IS NOT SHOWN ON THE DRAWINGS.
17. ENGAGE A QUALIFIED ELECTRICAL TESTING COMPANY TO LOCATE ALL UNDERGROUND UTILITIES IN PROPOSED CONSTRUCTION AREAS FOR ALL TRADES BEFORE DIGGING. THE CONTRACTOR IS RESPONSIBLE FOR CONTACTING THIS ORGANIZATION AND INCLUDING ALL ASSOCIATED COSTS IN THE BID PRICE.
18. PROVIDE CONCRETE HOUSEKEEPING PADS FOR ALL FLOOR MOUNTED EQUIPMENT.
19. ALL ELECTRICAL EQUIPMENT INSTALLED OUTDOOR AND/OR IN WET LOCATIONS SHALL BE IN NEMA 4X ENCLOSURE TYPE 316 STAINLESS STEEL.
20. ALL ELECTRICAL EQUIPMENT INCLUDING, BUT NOT LIMITED TO, SWITCHBOARDS, PANEL BOARDS, MOTOR STARTERS, ENCLOSED CIRCUIT BREAKERS, DISCONNECT SWITCHES, TRANSFORMERS, ENCLOSURES, AND WIRING DEVICES SHALL BE UL LISTED FOR ITS INTENDED USE.
21. ALL RECEPTACLE OUTLETS INSTALLED OUTDOORS AND/OR IN WET LOCATIONS SHALL BE LISTED WEATHER-RESISTANT TYPE WITH A WEATHERPROOF WHILE-IN-USE COVER THAT IS LISTED AND IDENTIFIED AS "EXTRA-DUTY".

60% SUBMITTAL

CONTRACT NO:			
PROJECT NO:			
	DATE:		
DESIGNED:	JER	05/06/16	
DRAFTED:	JLH	05/06/16	
CHECKED:	QAM	05/06/16	
APPROVED:			

REVISIONS

BY	NO	DATE	DESCRIPTION

Gannett Fleming

VRE

VIRGINIA RAILWAY EXPRESS

ALEXANDRIA PEDESTRIAN TUNNEL

DISCIPLINE: ELECTRICAL LEGEND, GENERAL NOTES AND ABBREVIATIONS

DRAWING NO: E-001

LIST NO:

SCALE: NONE

DATE ISSUED: 5/25/16

NOTES:

1. INFORMATION SHOWN ON THIS DRAWING PERTAINING TO EXISTING CONDITIONS HAS BEEN OBTAINED FROM AVAILABLE BUILDING DRAWINGS OR GENERAL FIELD OBSERVATIONS AND MAY NOT INDICATE ACTUAL EXISTING CONDITIONS. PRIOR TO FABRICATION OR PERFORMANCE OF ANY WORK, SHOULD CONDITIONS BE DISCOVERED THAT PREVENT EXECUTION OF THE WORK AS INDICATED, THE CONTRACTOR SHALL IMMEDIATELY NOTIFY THE ENGINEER IN WRITING AND AWAIT DIRECTION BEFORE PROCEEDING.
2. REFER TO DRAWING E-001 FOR ELECTRICAL LEGEND, ABBREVIATIONS, AND GENERAL NOTES.
3. REFER TO DRAWING E-601 FOR ONE-LINE DIAGRAM.
4. REFER TO DRAWING E-101 FOR TUNNEL DEMOLITION PLAN.
5. ALL WORK SHALL BE PERFORMED IN ACCORDANCE WITH THE PHASING PLAN. REFER TO PHASING DRAWINGS FOR ADDITIONAL INFORMATION.
6. DURING ALL PHASES OF CONSTRUCTION, CONTRACTOR SHALL PROVIDE TEMPORARY POWER AND LIGHTING TO ALL AREAS THAT ARE TO REMAIN OPERATIONAL.

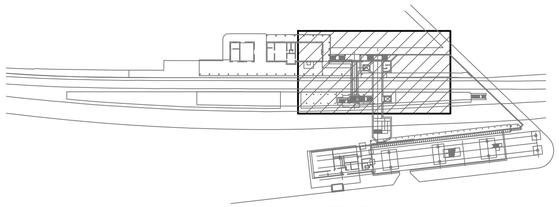

KEY PLAN
SCALE: 1/128" = 1'-0"

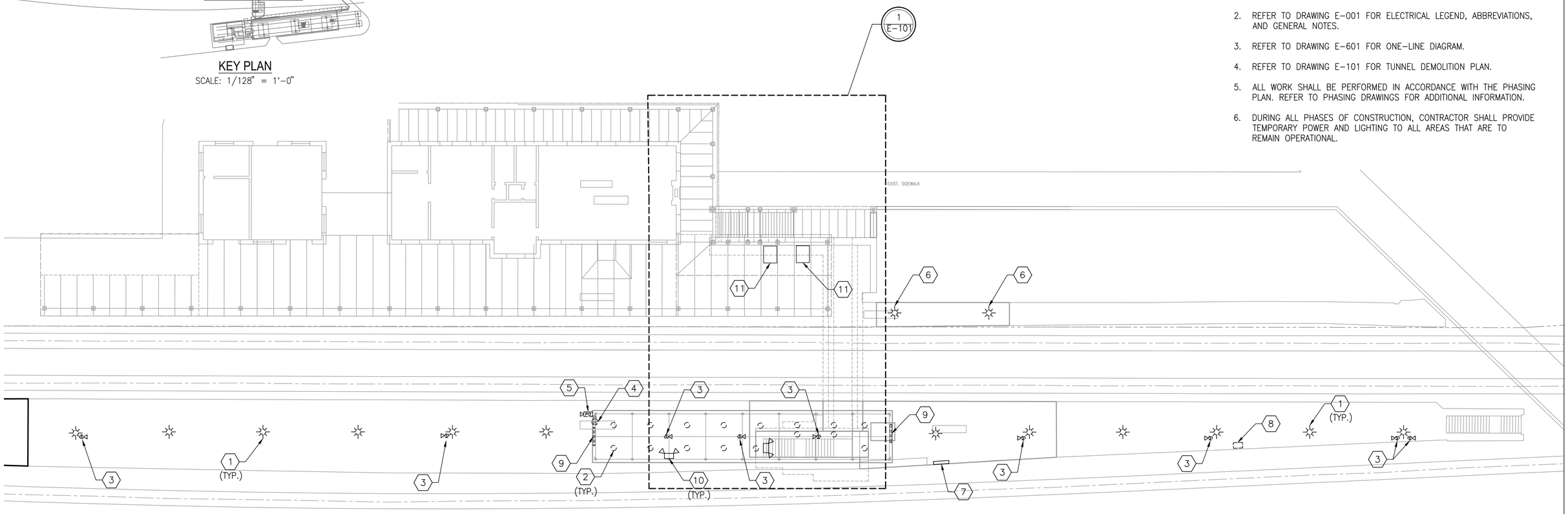

1 E-100 ELECTRICAL SITE PLAN - DEMOLITION
SCALE: 1/16" = 1'-0"

DEMOLITION NOTES:

1. REMOVE EXISTING POLE, LIGHT FIXTURE, ASSOCIATED WIRING AND CONDUITS BACK TO SOURCE.
2. REMOVE EXISTING CANOPY LIGHT FIXTURE, ASSOCIATED WIRING AND CONDUITS BACK TO SOURCE.
3. REMOVE EXISTING SPEAKER, ASSOCIATED WIRING AND CONDUITS BACK TO SOURCE.
4. REMOVE EXISTING RECEPTACLE, ASSOCIATED WIRING AND CONDUITS BACK TO SOURCE.
5. REMOVE EXISTING CAMERA, ASSOCIATED WIRING AND CONDUITS BACK TO SOURCE.
6. REMOVE EXISTING LIGHT POLE AND FIXTURE. EXTEND EXISTING WIRING AND CONDUIT TO MAINTAIN CONTINUITY OF EXISTING CIRCUITS.
7. REMOVE EXISTING ELECTRICAL CABINET WITH PANELBOARD, TIME CLOCK, AND LIGHTING CONTACTOR. REMOVE ASSOCIATED CONDUIT AND WIRING BACK TO SOURCE.
8. EXISTING ELECTRICAL CABINET TO REMAIN.
9. REMOVE EXISTING ELECTRONIC INFORMATION DISPLAY, ASSOCIATED WIRING AND CONDUIT BACK TO SOURCE.
10. REMOVE EXISTING EMERGENCY LIGHT FIXTURE, ASSOCIATED WIRING AND CONDUITS BACK TO SOURCE.
11. EXISTING TICKET BOOTH TO BE RELOCATED. PROTECT AND RETAIN EXISTING WIRING AND CONDUITS FOR RECONNECTION.

PROJECT NORTH

2' 0 8' 16' 32'
1/16" = 1'-0"

60% SUBMITTAL

CONTRACT NO:		
PROJECT NO:		
		DATE:
DESIGNED:	JER	05/06/16
DRAFTED:	JLH	05/06/16
CHECKED:	QAM	05/06/16
APPROVED:		

REVISIONS

BY	NO	DATE	DESCRIPTION

Gannett Fleming

VRE

VIRGINIA RAILWAY EXPRESS

ALEXANDRIA
PEDESTRIAN TUNNEL

DISCIPLINE: ELECTRICAL
SITE PLAN - DEMOLITION

DRAWING NO: E-100

LIST NO:

SCALE: 1/16" = 1'-0"

DATE ISSUED: 5/25/16

NOTES:

1. INFORMATION SHOWN ON THIS DRAWING PERTAINING TO EXISTING CONDITIONS HAS BEEN OBTAINED FROM AVAILABLE BUILDING DRAWINGS OR GENERAL FIELD OBSERVATIONS AND MAY NOT INDICATE ACTUAL EXISTING CONDITIONS. PRIOR TO FABRICATION OR PERFORMANCE OF ANY WORK, SHOULD CONDITIONS BE DISCOVERED THAT PREVENT EXECUTION OF THE WORK AS INDICATED, THE CONTRACTOR SHALL IMMEDIATELY NOTIFY THE ENGINEER IN WRITING AND AWAIT DIRECTION BEFORE PROCEEDING.
2. REFER TO DRAWING E-001 FOR ELECTRICAL LEGEND, ABBREVIATIONS, AND GENERAL NOTES.
3. ALL WORK SHALL BE PERFORMED IN ACCORDANCE WITH THE PHASING PLAN. REFER TO PHASING DRAWINGS FOR ADDITIONAL INFORMATION.
4. DURING ALL PHASES OF CONSTRUCTION, CONTRACTOR SHALL PROVIDE TEMPORARY POWER AND LIGHTING TO ALL AREAS THAT ARE TO REMAIN OPERATIONAL.

DEMOLITION NOTES:

1. REMOVE EXISTING LIGHT FIXTURE, ASSOCIATED WIRING AND CONDUIT BACK TO SOURCE.
2. REMOVE EXISTING CAMERA, ASSOCIATED WIRING AND CONDUIT BACK TO SOURCE.

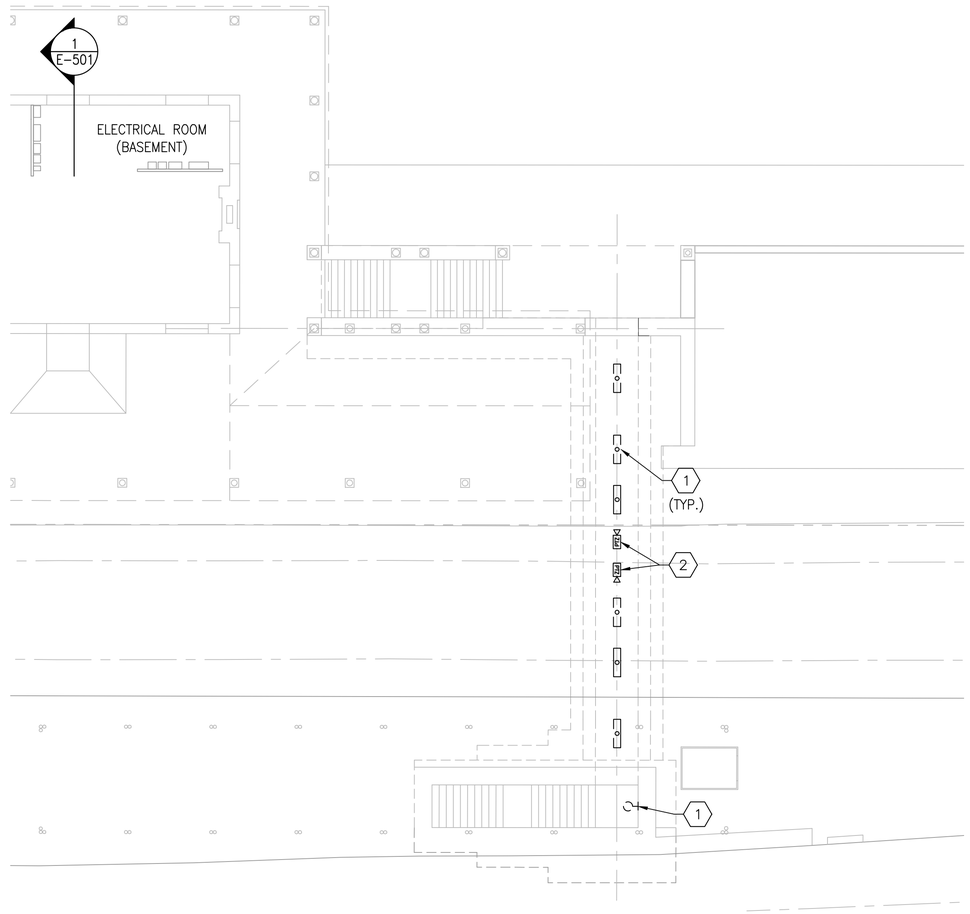

1 / E-101 ELECTRICAL DEMOLITION PLAN - TUNNEL
SCALE: 3/32" = 1'-0"

PROJECT NORTH

1'0 6' 12' 24'
3/32" = 1'-0"

60% SUBMITTAL

CONTRACT NO:		
PROJECT NO:		
		DATE:
DESIGNED:	JER	05/06/16
DRAFTED:	JLH	05/06/16
CHECKED:	QAM	05/06/16
APPROVED:		

REVISIONS

BY	NO	DATE	DESCRIPTION

Gannett Fleming

VRE

VIRGINIA RAILWAY EXPRESS

ALEXANDRIA
PEDESTRIAN TUNNEL

DISCIPLINE: ELECTRICAL
DEMOLITION PLAN - TUNNEL

DRAWING NO: E-101

LIST NO:

SCALE: 3/32" = 1'-0"

DATE ISSUED: 5/25/16

NOTES:

1. INFORMATION SHOWN ON THIS DRAWING PERTAINING TO EXISTING CONDITIONS HAS BEEN OBTAINED FROM AVAILABLE BUILDING DRAWINGS OR GENERAL FIELD OBSERVATIONS AND MAY NOT INDICATE ACTUAL EXISTING CONDITIONS. PRIOR TO FABRICATION OR PERFORMANCE OF ANY WORK, SHOULD CONDITIONS BE DISCOVERED THAT PREVENT EXECUTION OF THE WORK AS INDICATED, THE CONTRACTOR SHALL IMMEDIATELY NOTIFY THE ENGINEER IN WRITING AND AWAIT DIRECTION BEFORE PROCEEDING.
2. REFER TO DRAWING E-001 FOR ELECTRICAL LEGEND, ABBREVIATIONS, AND GENERAL NOTES.
3. REFER TO DRAWING E-601 FOR ONE-LINE DIAGRAM.

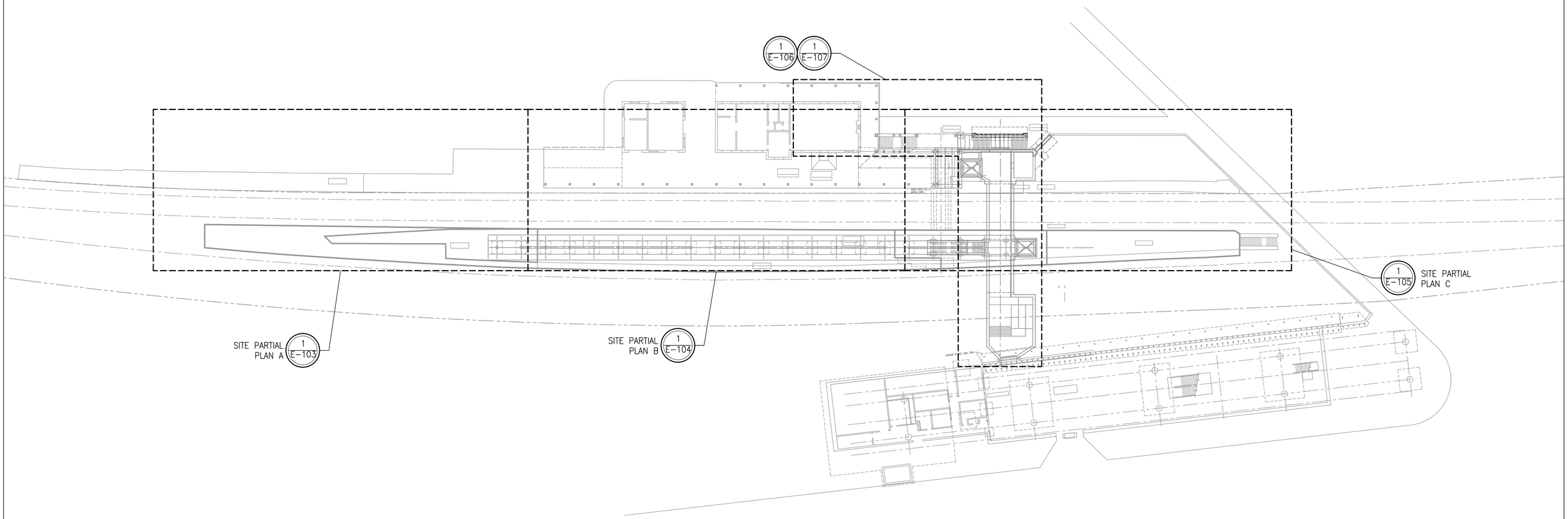

1 E-102 ELECTRICAL OVERALL SITE PLAN

SCALE: 1/32" = 1'-0"

PROJECT NORTH

4' 0 16" 32' 64'
1/32" = 1'-0"

60% SUBMITTAL

CONTRACT NO:		
PROJECT NO:		
		DATE:
DESIGNED:	JER	05/06/16
DRAFTED:	JLH	05/06/16
CHECKED:	QAM	05/06/16
APPROVED:		

REVISIONS

BY	NO	DATE	DESCRIPTION

Gannett Fleming

VRE

VIRGINIA RAILWAY EXPRESS

ALEXANDRIA
PEDESTRIAN TUNNEL

DISCIPLINE: ELECTRICAL OVERALL SITE PLAN

DRAWING NO: E-102

LIST NO:

SCALE: 1/32" = 1'-0"

DATE ISSUED: 5/25/16

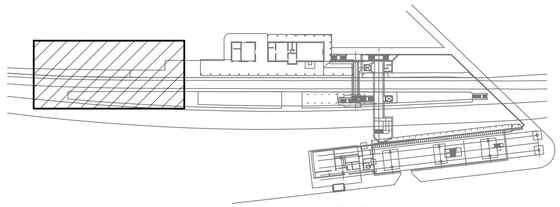

KEY PLAN
SCALE: 1/128" = 1'-0"

NOTES:

1. INFORMATION SHOWN ON THIS DRAWING PERTAINING TO EXISTING CONDITIONS HAS BEEN OBTAINED FROM AVAILABLE BUILDING DRAWINGS OR GENERAL FIELD OBSERVATIONS AND MAY NOT INDICATE ACTUAL EXISTING CONDITIONS. PRIOR TO FABRICATION OR PERFORMANCE OF ANY WORK, SHOULD CONDITIONS BE DISCOVERED THAT PREVENT EXECUTION OF THE WORK AS INDICATED, THE CONTRACTOR SHALL IMMEDIATELY NOTIFY THE ENGINEER IN WRITING AND AWAIT DIRECTION BEFORE PROCEEDING.
2. REFER TO DRAWING E-001 FOR ELECTRICAL LEGEND, ABBREVIATIONS, AND GENERAL NOTES.
3. REFER TO DRAWING E-602 FOR LIGHTING FIXTURE AND PANEL SCHEDULES.
4. REFER TO DRAWING E-601 FOR ONE-LINE DIAGRAM.
5. ALL WORK SHALL BE PERFORMED IN ACCORDANCE WITH THE PHASING PLAN. REFER TO PHASING DRAWINGS FOR ADDITIONAL INFORMATION.
6. DURING ALL PHASES OF CONSTRUCTION, CONTRACTOR SHALL PROVIDE TEMPORARY POWER AND LIGHTING TO ALL AREAS THAT ARE TO REMAIN OPERATIONAL.

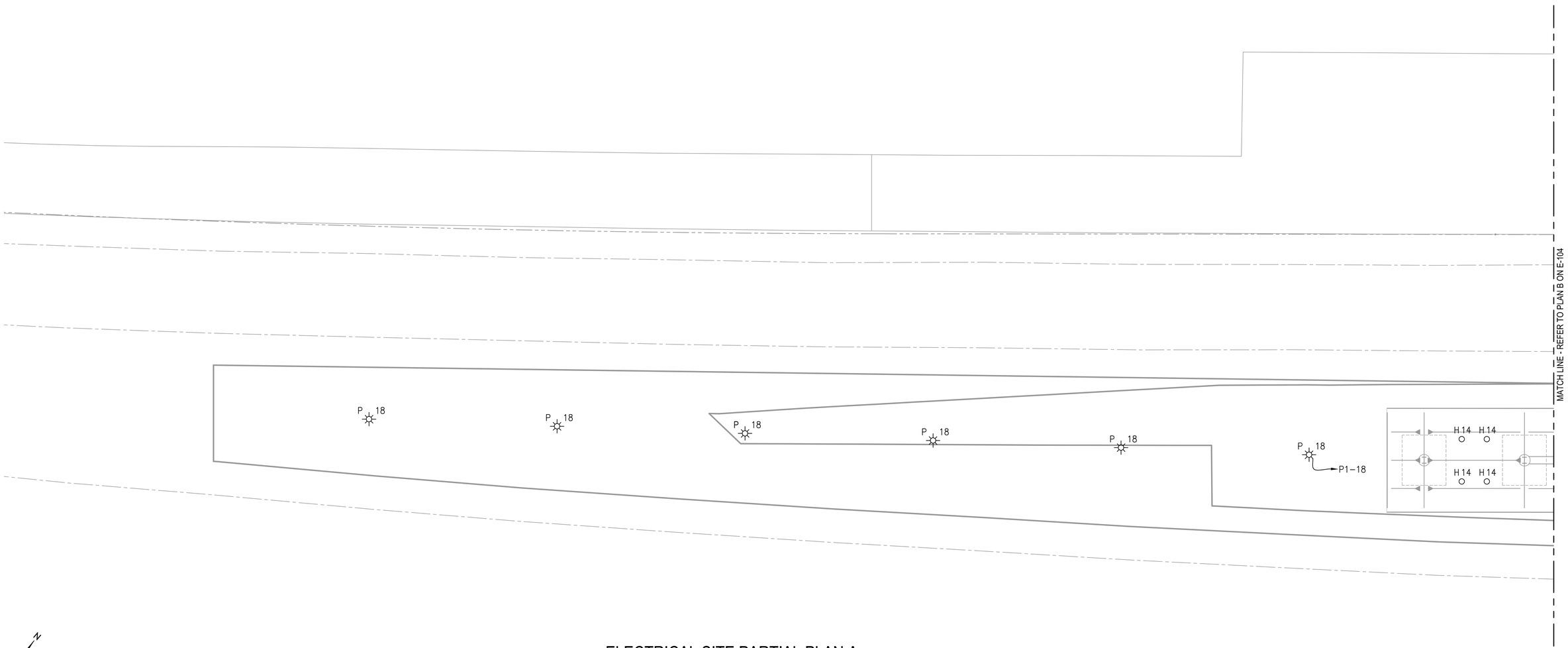

PROJECT NORTH

1 / E-103 ELECTRICAL SITE PARTIAL PLAN A
SCALE: 1/8" = 1'-0"

1' 0 4' 8' 16'
1/8" = 1'-0"

60% SUBMITTAL

CONTRACT NO:			
PROJECT NO:			
		DATE:	
DESIGNED:	JER	05/06/16	
DRAFTED:	JLH	05/06/16	
CHECKED:	QAM	05/06/16	
APPROVED:			

REVISIONS

BY	NO	DATE	DESCRIPTION

Gannett Fleming

VRE

VIRGINIA RAILWAY EXPRESS

ALEXANDRIA
PEDESTRIAN TUNNEL

DISCIPLINE:
ELECTRICAL
SITE PARTIAL PLAN A

SCALE: 1/8" = 1'-0"

DATE ISSUED: 5/25/16

DRAWING NO: E-103

LIST NO:

NOTES:

1. INFORMATION SHOWN ON THIS DRAWING PERTAINING TO EXISTING CONDITIONS HAS BEEN OBTAINED FROM AVAILABLE BUILDING DRAWINGS OR GENERAL FIELD OBSERVATIONS AND MAY NOT INDICATE ACTUAL EXISTING CONDITIONS. PRIOR TO FABRICATION OR PERFORMANCE OF ANY WORK, SHOULD CONDITIONS BE DISCOVERED THAT PREVENT EXECUTION OF THE WORK AS INDICATED, THE CONTRACTOR SHALL IMMEDIATELY NOTIFY THE ENGINEER IN WRITING AND AWAIT DIRECTION BEFORE PROCEEDING.
2. REFER TO DRAWING E-001 FOR ELECTRICAL LEGEND, ABBREVIATIONS, AND GENERAL NOTES.
3. REFER TO DRAWING E-602 FOR LIGHTING FIXTURE SCHEDULE AND PANEL SCHEDULES.
4. REFER TO DRAWING E-601 FOR ONE-LINE DIAGRAM.
5. ALL WORK SHALL BE PERFORMED IN ACCORDANCE WITH THE PHASING PLAN. REFER TO PHASING DRAWINGS FOR ADDITIONAL INFORMATION.
6. DURING ALL PHASES OF CONSTRUCTION, CONTRACTOR SHALL PROVIDE TEMPORARY POWER AND LIGHTING TO ALL AREAS THAT ARE TO REMAIN OPERATIONAL.

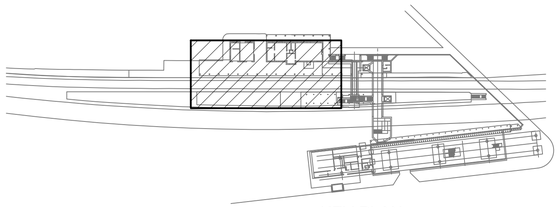

KEY PLAN
SCALE: 1/128" = 1'-0"

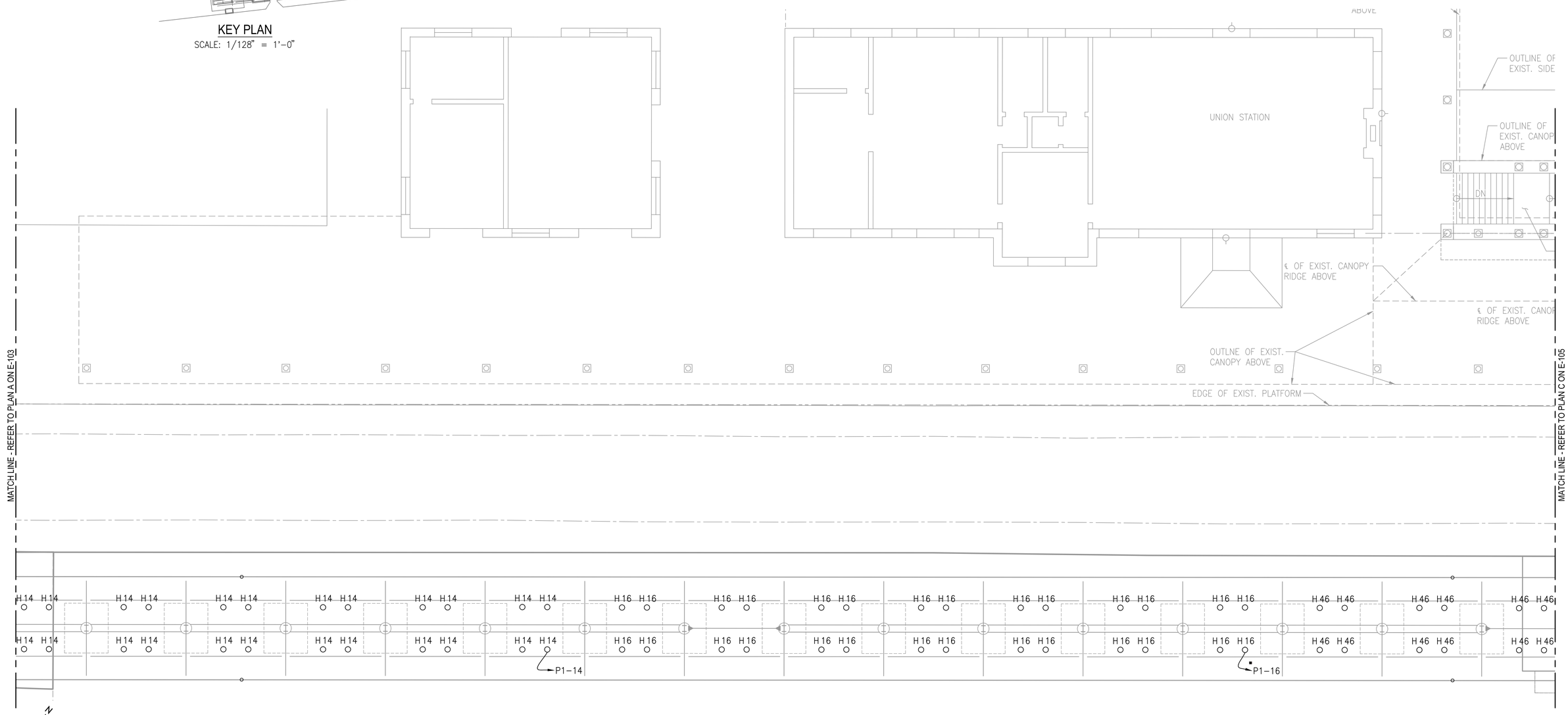

1 E-104 ELECTRICAL SITE PARTIAL PLAN B
SCALE: 1/8" = 1'-0"

1' 0 4' 8' 16'
1/8" = 1'-0"

60% SUBMITTAL

CONTRACT NO:		
PROJECT NO:		
		DATE:
DESIGNED:	JER	05/06/16
DRAFTED:	JLH	05/06/16
CHECKED:	QAM	05/06/16
APPROVED:		

REVISIONS

BY	NO	DATE	DESCRIPTION

Gannett Fleming

VRE

VIRGINIA RAILWAY EXPRESS

ALEXANDRIA
PEDESTRIAN TUNNEL

DISCIPLINE: ELECTRICAL
SITE PARTIAL PLAN B

DRAWING NO: E-104

LIST NO:

SCALE: 1/8" = 1'-0"

DATE ISSUED: 5/25/16

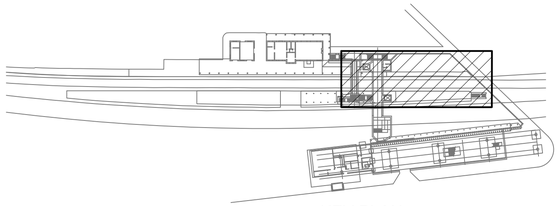

KEY PLAN

SCALE: 1/128" = 1'-0"

KEYED NOTES:

1. INSTALL PHOTOCELL ON LIGHT POLE, FREE OF ANY OBSTRUCTION BY EQUIPMENT OR OTHER ELEMENTS, FOR ACCESS TO AMBIENT LIGHTING. COORDINATE EXACT LOCATION IN FIELD.
2. CONNECT NEW LIGHT FIXTURES TO EXISTING LIGHTING CIRCUIT FOR EXISTING WEST PLATFORM CANOPY LIGHTING.
3. PROVIDE SMOKE DETECTOR FOR ELEVATOR RECALL FUNCTION. PROVIDE CONTROL CIRCUITS TO ELEVATOR CONTROLLER THROUGH RELAYS FOR ELEVATOR RECALL.
4. PROVIDE 208V, 2-POLE, 30A FUSED DISCONNECT SWITCH IN NEMA 4X SS ENCLOSURE WITH 20A FUSES.
5. PROVIDE UNISTRUT SUPPORT ON CONCRETE PAD.

NOTES:

1. INFORMATION SHOWN ON THIS DRAWING PERTAINING TO EXISTING CONDITIONS HAS BEEN OBTAINED FROM AVAILABLE BUILDING DRAWINGS OR GENERAL FIELD OBSERVATIONS AND MAY NOT INDICATE ACTUAL EXISTING CONDITIONS. PRIOR TO FABRICATION OR PERFORMANCE OF ANY WORK, SHOULD CONDITIONS BE DISCOVERED THAT PREVENT EXECUTION OF THE WORK AS INDICATED, THE CONTRACTOR SHALL IMMEDIATELY NOTIFY THE ENGINEER IN WRITING AND AWAIT DIRECTION BEFORE PROCEEDING.
2. REFER TO DRAWING E-001 FOR ELECTRICAL LEGEND, ABBREVIATIONS, AND GENERAL NOTES.
3. REFER TO DRAWING E-602 FOR LIGHTING FIXTURE SCHEDULE AND PANEL SCHEDULES.
4. REFER TO DRAWING E-601 FOR ONE-LINE DIAGRAM.
5. REFER TO E-107 FOR TUNNEL LIGHTING PLAN.
6. ALL WORK SHALL BE PERFORMED IN ACCORDANCE WITH THE PHASING PLAN. REFER TO PHASING DRAWINGS FOR ADDITIONAL INFORMATION.
7. DURING ALL PHASES OF CONSTRUCTION, CONTRACTOR SHALL PROVIDE TEMPORARY POWER AND LIGHTING TO ALL AREAS THAT ARE TO REMAIN OPERATIONAL.

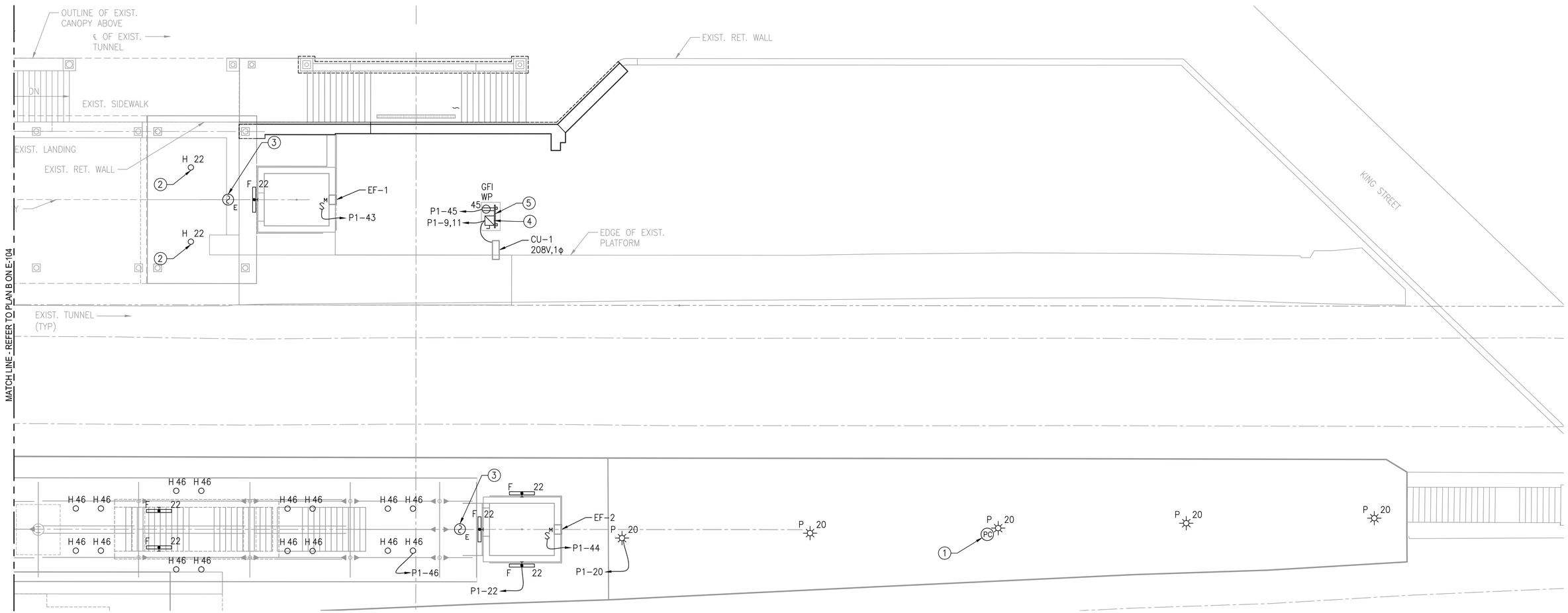

PROJECT NORTH

1 / E-105 ELECTRICAL SITE PARTIAL PLAN C

SCALE: 1/8" = 1'-0"

1' 0 4' 8' 16'
1/8" = 1'-0"

60% SUBMITTAL

CONTRACT NO:		
PROJECT NO:		
		DATE:
DESIGNED:	JER	05/06/16
DRAFTED:	JLH	05/06/16
CHECKED:	QAM	05/06/16
APPROVED:		

REVISIONS			
BY	NO	DATE	DESCRIPTION

Gannett Fleming

VRE

VIRGINIA RAILWAY EXPRESS

ALEXANDRIA PEDESTRIAN TUNNEL

DISCIPLINE:	DRAWING NO:
ELECTRICAL SITE PARTIAL PLAN C	E-105
SCALE: 1/8" = 1'-0" / DATE ISSUED: 5/25/16	LIST NO:

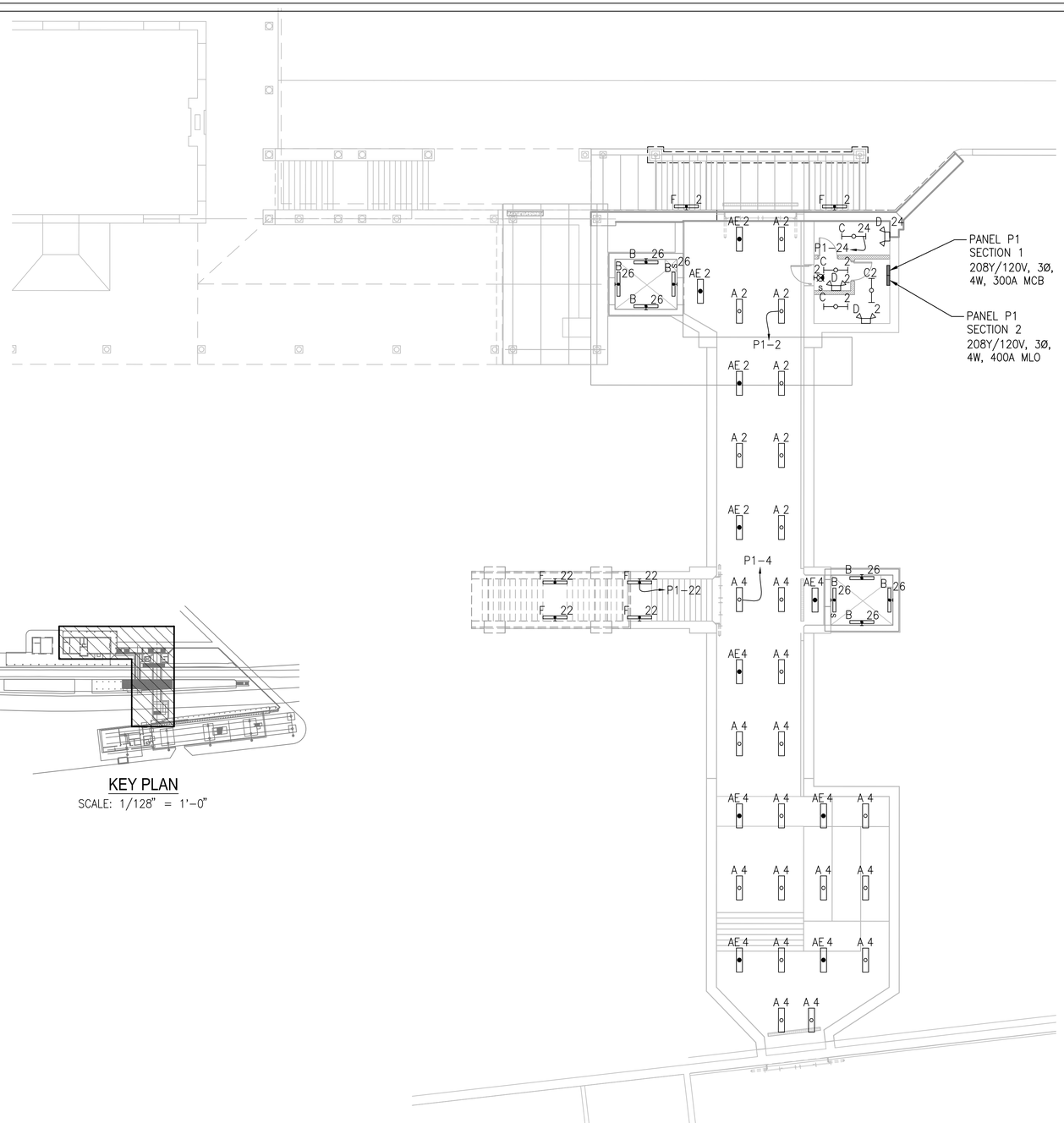

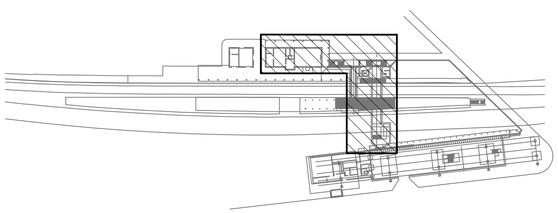

KEY PLAN
SCALE: 1/128" = 1'-0"

NOTES:

1. INFORMATION SHOWN ON THIS DRAWING PERTAINING TO EXISTING CONDITIONS HAS BEEN OBTAINED FROM AVAILABLE BUILDING DRAWINGS OR GENERAL FIELD OBSERVATIONS AND MAY NOT INDICATE ACTUAL EXISTING CONDITIONS. PRIOR TO FABRICATION OR PERFORMANCE OF ANY WORK, SHOULD CONDITIONS BE DISCOVERED THAT PREVENT EXECUTION OF THE WORK AS INDICATED, THE CONTRACTOR SHALL IMMEDIATELY NOTIFY THE ENGINEER IN WRITING AND AWAIT DIRECTION BEFORE PROCEEDING.
2. ALL EXIT AND EGRESS LIGHTING SHALL BE CONNECTED ON THE UN-SWITCHED PORTION OF THE CIRCUIT.
3. REFER TO DRAWING E-001 FOR ELECTRICAL LEGEND, ABBREVIATIONS, GENERAL NOTES AND LIGHT FIXTURE SCHEDULE.
4. REFER TO DRAWING E-602 FOR LIGHT FIXTURE SCHEDULES AND PANEL SCHEDULES.
5. REFER TO DRAWING E-601 FOR ONE LINE DIAGRAM.
6. ALL WORK SHALL BE PERFORMED IN ACCORDANCE WITH THE PHASING PLAN. REFER TO PHASING DRAWINGS FOR ADDITIONAL INFORMATION.
7. DURING ALL PHASES OF CONSTRUCTION, CONTRACTOR SHALL PROVIDE TEMPORARY POWER AND LIGHTING TO ALL AREAS THAT ARE TO REMAIN OPERATIONAL.

PROJECT NORTH

1 / E-107 ELECTRICAL LIGHTING PLAN - TUNNEL
SCALE: 3/32" = 1'-0"

1'0 6' 12' 24'
3/32" = 1'-0"

60% SUBMITTAL

CONTRACT NO:			
PROJECT NO:			
		DATE:	
DESIGNED:	JER	05/06/16	
DRAFTED:	JLH	05/06/16	
CHECKED:	QAM	05/06/16	
APPROVED:			

REVISIONS

BY	NO	DATE	DESCRIPTION

Gannett Fleming

VRE

VIRGINIA RAILWAY EXPRESS

ALEXANDRIA
PEDESTRIAN TUNNEL

DISCIPLINE: ELECTRICAL LIGHTING PLAN - TUNNEL

DRAWING NO: E-107

LIST NO:

SCALE: 3/32" = 1'-0"

DATE ISSUED: 5/25/16

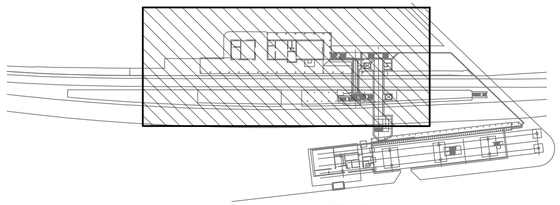

KEY PLAN

SCALE: 1/128" = 1'-0"

KEYED NOTES:

1. PROVIDE CONDUIT AND WIRING TO AN EMPTY JUNCTION BOX AT SPEAKER LOCATION. SPEAKER PROVIDED AND INSTALLED BY OTHERS. REFER TO RISER DIAGRAM ON DRAWING E-601.
2. PROVIDE CONDUIT AND WIRING TO AN EMPTY JUNCTION BOX AT CAMERA LOCATION. CAMERA PROVIDED AND INSTALLED BY OTHERS. REFER TO RISER DIAGRAM ON DRAWING E-601.
3. PROVIDE CONDUIT AND WIRING TO AN EMPTY JUNCTION BOX AT PID MONITOR LOCATION. PID MONITOR PROVIDED AND INSTALLED BY OTHERS. REFER TO RISER DIAGRAM ON DRAWING E-601.
4. RELOCATED TICKET BOOTH. EXTEND AND RECONNECT EXISTING WIRING AND CONDUIT RETAINED DURING DEMOLITION.

NOTES:

1. INFORMATION SHOWN ON THIS DRAWING PERTAINING TO EXISTING CONDITIONS HAS BEEN OBTAINED FROM AVAILABLE BUILDING DRAWINGS OR GENERAL FIELD OBSERVATIONS AND MAY NOT INDICATE ACTUAL EXISTING CONDITIONS. PRIOR TO FABRICATION OR PERFORMANCE OF ANY WORK, SHOULD CONDITIONS BE DISCOVERED THAT PREVENT EXECUTION OF THE WORK AS INDICATED, THE CONTRACTOR SHALL IMMEDIATELY NOTIFY THE ENGINEER IN WRITING AND AWAIT DIRECTION BEFORE PROCEEDING.
2. REFER TO DRAWING E-001 FOR ELECTRICAL LEGEND, ABBREVIATIONS, AND GENERAL NOTES.
3. REFER TO DRAWING E-601 FOR ONE-LINE DIAGRAM.
5. ALL WORK SHALL BE PERFORMED IN ACCORDANCE WITH THE PHASING PLAN. REFER TO PHASING DRAWINGS FOR ADDITIONAL INFORMATION.
6. DURING ALL PHASES OF CONSTRUCTION, CONTRACTOR SHALL PROVIDE TEMPORARY POWER AND LIGHTING TO ALL AREAS THAT ARE TO REMAIN OPERATIONAL.
7. CAMERAS, PID MONITORS AND PA SYSTEM SPEAKERS ARE FURNISHED AND INSTALLED BY VRE. CONTRACTOR SHALL FURNISH AND INSTALL POWER CIRCUITS TO AN EMPTY JUNCTION BOX AT EQUIPMENT LOCATION AND EMPTY RACEWAYS FOR CONTROL WIRING. CONTRACTOR SHALL COORDINATE EXACT LOCATION AND QUANTITIES WITH VRE.

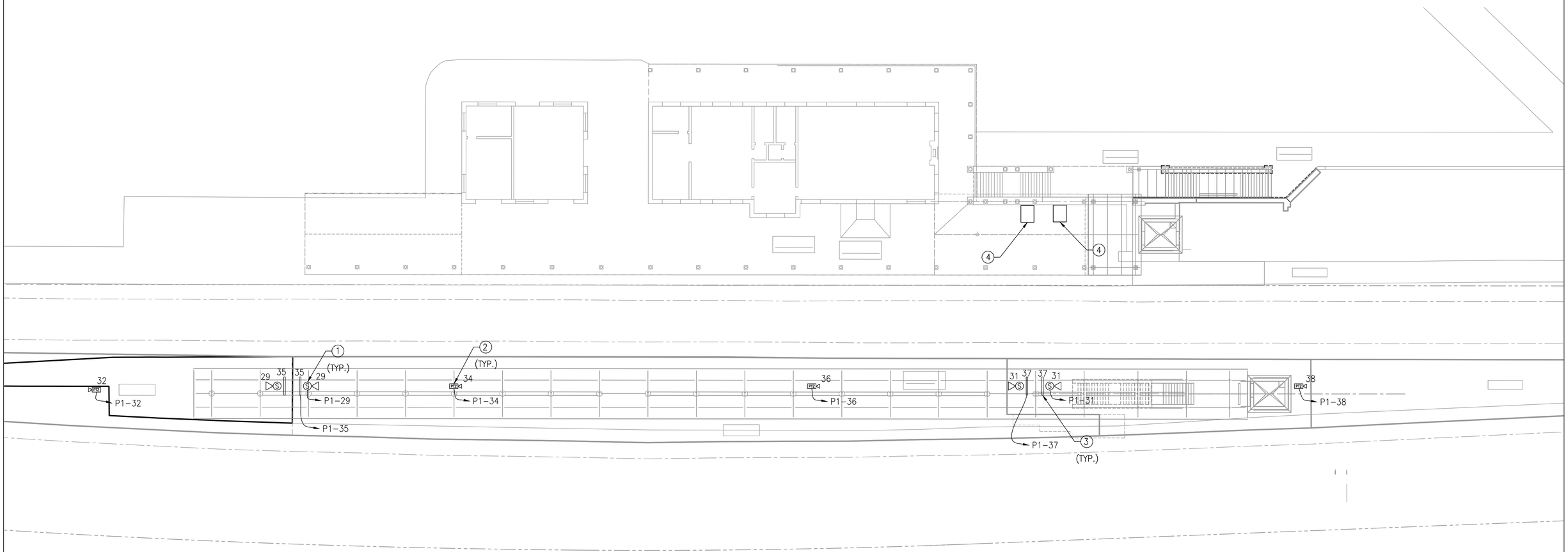

1 E-108 ELECTRICAL SITE PLAN - SPECIAL SYSTEMS

SCALE: 1/16" = 1'-0"

PROJECT NORTH

2' 0 8' 16' 32'

1/16" = 1'-0"

60% SUBMITTAL

CONTRACT NO:			
PROJECT NO:			
		DATE:	
DESIGNED:	JER	05/06/16	
DRAFTED:	JLH	05/06/16	
CHECKED:	QAM	05/06/16	
APPROVED:			

REVISIONS

BY	NO	DATE	DESCRIPTION

Gannett Fleming

VRE

VIRGINIA RAILWAY EXPRESS

ALEXANDRIA
PEDESTRIAN TUNNEL

DISCIPLINE: ELECTRICAL
SITE PLAN - SPECIAL SYSTEMS

DRAWING NO: E-108

LIST NO:

SCALE: 1/16" = 1'-0"

DATE ISSUED: 5/25/16